Annex No 1 to PCC Resolution No ……. of …….

REGULATION,

LAYING DOWN THE GENERAL REQUIREMENTS FOR LAND USE AND THE TECHNICAL REQUIREMENTS FOR STRUCTURES IN PRAGUE CAPITAL CITY (PRAGUE BUILDING REGULATIONS)

Prague City Council resolved on ……to issue according to Section 44(2) of Act No 131/2000, on Prague Capital City, as amended by Act No 320/2002, and Section 194(e) of Act No 183/2006, on town and country planning and building code (Building Act), as amended by Act No 350/2012, this Regulation:

PART ONE
INTRODUCTORY PROVISIONS

Section 1
Subject

(1) This Regulation determines the general requirements for land use and the technical requirements for structures in Prague Capital City, namely:

a) general zoning and land-use technical requirements for the use and arrangement of land area including requirements for the placement of structures, equipment and activities (the "land use requirements");

b) technical requirements for structures and equipment and for their implementation (the "building requirements").

(2) The provisions of this Regulation apply when preparing planning documentation and planning materials in Prague Capital City, in particular when defining areas and determining the conditions for their use and arrangement.

(3) The provisions of this Regulation apply when defining plots of land and when designing and placing structures and equipment on them, for changes in land use, and when dividing or merging plots of land. The provisions of this Regulation also apply for changes to structures or equipment, temporary structures on building lots, for changes to the impact of the use of a structure or facility on land area, for defining open public spaces and for developed plots of land with structures that are cultural monuments or are in historical reservations or historical zones[1] unless binding land-use technical or building technical reasons exclude their application.

(4) The provisions of this Regulation apply when designing, permitting, announcing, implementing, using or removing structures or equipment; this is without prejudice to the provisions of other

[1] Act No 20/1987, on state monument care, as amended

legal regulations[2]. The provisions of this Regulation also apply for changes to structures or equipment, for maintenance work, for changes in the use of structures or equipment, for temporary structures at building lots and for structures that are cultural monuments or are in historical reservations or historical zones[1], unless excluded by binding land-use technical or building technical reasons.

(5) This Regulation was announced in accordance with Directive (EU) 2015/1535 of the European Parliament and of the Council of 9 September 2015, laying down a procedure for the provision of information in the field of technical regulations and of rules on Information Society services, and with Section 7 of Act No 22/1997, on technical requirements for products and on amendments to some Acts, as amended.

Section 2
Basic Concepts

For the purposes of this Regulation:

a) a site means part of land area not divided by open public space, used for a single purpose with its own regime;

b) a block means a coherent part of land area, made up of a set of plots of land, a single plot of land or part thereof, as a rule bordered street open public space and defined by a street line;

c) a building means an aboveground structure including its underground part, spatially concentrated and externally mostly closed by perimeter walls and roof structures;

d) an apartment means a set of rooms, or one habitable room, which due to its structural technical layout and equipment fulfils the requirements for permanent housing and is intended for this purpose of use;

e) the flood level means the highest recorded natural flooding level, or the level for which the inundation area has been determined, if such determined level is higher; the flood level is variable along a watercourse;

f) a boundary means a depicted, determined, or derived line (e.g. between developable and non-developable land areas, street open public space and a block, or between developable and non-developable parts of a block);

g) the gross floor area means the sum of areas defined by the external outline of the individual storeys of a building with the exception of open and partially open parts (balconies, loggias, corridors, rooftop terraces etc.); on storeys with sloping walls or a sloping ceiling the external outline of the construction at a level of 1.2 m above floor level is counted;

h) the character of a land area means a set of important natural landscape, socio-economic, historical and cultural civilizational, especially urbanistic, architectonic and aesthetic elements or qualities specific for the land area in question (primarily location in the land area, the intensity, structure and type of development, the definition and arrangement of open public spaces, the infrastructure, method of use of the land area and the degree of changes to it), including their mutual relationships and linkages.

---

[2] For example, Decree No 410/2005, on hygienic requirements for premises and equipment operations and for facilities designated for education of children and juveniles, as amended by Decree No 343/2009, Decree No 398/2009, on general technical requirements for the barrier-free use of structures, Government Regulation No 66/1971, on monument reservations in Prague Capital City

i) the protected part of an inundation area means the part of an inundation area[3] after the implementation of a coherent part of permanent or mobile anti-flood measures against flood flows in a watercourse, including the implementation of measures against flooding by wastewater and storm water; only land area protected from flooding up to the flood level according to Section 2(e) is considered a protected part of an inundation area,

j) a collector means an underground passage or crawlspace in which technical infrastructure networks are brought together;

k) a locality means an area or set of areas, or part of an area, defined based on its prevailing character;

l) the scale of structures or areas means the determination of their variable magnitude values, in particular length, width, height and planar dimensions and their mutual ratio;

m) a room means a spatially closed part of a structure defined by a floor, ceiling or roof construction and solid walls, while:

1. a habitable room means a room in an apartment fulfilling the conditions determined by this Regulation, which is intended for permanent housing, has an area of at least 8 m^2, has direct natural lighting, direct ventilation and heating enabling temperature control; a kitchen is considered to be a habitable room if it has an area of at least 12 m2;

2. a residence room means a room fulfilling the conditions determined by this Regulation, which through its location, size and structural arrangement fulfils the requirements for persons to sojourn in it (in particular offices, surgeries, teaching spaces, rooms in medical facilities);

n) the aboveground part of a structure means the part of a structure above the level of the adjacent landscaped terrain,

o) an attic space means a predominantly defined construction of a pitched roof; attic storeys may be located in an attic;

p) a storey means an accessible part of a building defined by two superimposed upper faces of load-bearing ceiling structures or the upper face of a rough floor on the ground or a roof construction; a single storey is also considered to be those parts of a building that have differing floor levels up to the height of half of that storey; while:

1. an underground storey means a storey where the level of the prevailing part of the floor is more than 0.8 m under the highest point of the adjacent landscaped terrain in a strip 3.0 m wide around the perimeter of the structure;

2. an aboveground storey means each storey with the exception of underground storeys, including a recessed story and attic;

3. a recessed storey means a storey above the last full storey or other recessed storey, whose perimeter walls recede at least from one edge of the principle plane of the outer perimeter of the wall of the building;

4. an attic storey means a storey above the last full storey, or above a recessed or other attic storey, prevailingly defined by a pitched roof in which at most half the length of the perimeter walls exceed a height

[3] Section 66 of Act No 254/2001, on water and on amendments to some other Acts (Water Act), as amended.

of 1.6 m from floor level;

q) the underground part of a structure means a part of a structure under the level of the adjacent landscaped terrain,

r) a clearance is a missing part of a development, meaning:

1. a block or part of a block not yet developed in a land area otherwise prevailingly developed, intended for development, or

2. an undeveloped or partially developed part of a plot of land or a set of plots of land including a corner in an existing development intended for development, defined by construction lines and the boundaries of adjacent plots of land developed or intended for development;

s) jointly addressed means a set of jointly conceived and mutually spatially associated structures and open public space including the related infrastructure, placed through a single land use decision or zoning plan, which replaces them;

t) a parking space means an area used for parking or stopping a passenger car, while:

1. a tied parking space means a parking space used for parking or stopping passenger cars reserved for a particular purpose of use in the structure or the set of structures, as a rule intended for employees or for residents;

2. a visitor's parking space means a parking space used for parking passenger cars of visitors for all purposes of use in the structure or the set of structures,

u) an individual housing structure means:

1. a family house in which over half the floor area meets the requirements for permanent family housing and that is intended for this purpose; a family house may have at most three independent apartments, at most two aboveground and one underground story(ies) and an attic;

2. other structures for housing, in which over half the floor area meets the requirements for permanent family housing and that is intended for this purpose, and which have at most three independent apartments and at most five storeys, of which at most four are above ground;

v) a structure for family recreation means a structure that, through its volume parameters, appearance and construction arrangement, meets the requirements for family recreation, in particular a cottage, recreational country house or an allotment shack;

w) a structure with an assembly space means a building with at least one space intended for the assembly of at least 200 people, in which there is a floor area of less than 4 m^2 per person;

x) an alley means a prevailingly linear planting of trees in a defined space, in particular along streets and roads;

y) an accommodation unit means a room or set of rooms fulfilling, through their construction technical arrangement and furnishing, the requirements for temporary accommodation and intended for that purpose, and a room or set of rooms at a social services facility intended for permanent housing, while:

1. a short-term accommodation unit means an accommodation unit fulfilling the requirements for short-term accommodation and intended for that purpose, for example an accommodation unit in a hotel or in a bed and

breakfast establishment;

2. a long-term accommodation unit means an accommodation unit fulfilling the requirements for long-term accommodation and intended for that purpose, e.g. an accommodation unit in a hostel; a long-term accommodation unit also means a unit at a social services facility intended for permanent housing;

z) a street open public space means part of an open public space made up of all the streets, squares and those roads and areas that create the basic network for the service and permeability of the land area; a street open public space is usually defined by a street line and may consist of both paved and unpaved areas; a street open public space and the publicly accessible parts of blocks together make up an open public space[4];

PART TWO
LAND USE REQUIREMENTS

CHAPTER I

General principles of land area arrangement in land use planning documentation

Section 3

Breaking down land area by level of development and development potential

(1) Land area is broken down according to current use according to Section 2(1)(d) and (f) of the Building Act into developed land area and undeveloped land area. The boundary between them is defined by a developed land area line.

(2) Land area is broken down according to proposed use according to Section 2(1)(j) of the Building Act into developable land area and non-developable land area. The boundary between them is defined by a developable land area line.

(3) Land area is further broken down into areas, while:

a) developable land area is composed of developable areas in a developed land area and developable areas in an as yet undeveloped land area,

b) non-developable land area is composed of non-developable areas in an undeveloped land area and non-developable areas in a developed land area.

Breakdown of land area according to anticipated level of changes (stability)

From the perspective of the anticipated level of changes, developable and non-developable land area is broken down into land area, or areas:

[4] Section 14b of Act No 131/2000, on Prague Capital City, as amended

a) stabilized with a fully developed existing character, where there are no proposed fundamental changes to the existing character, importance or method of use of the land area and the land area is only supplemented;

b) transformational, intended for new use of devalued land area for development or for other use of the land area;

c) developmental, in which the creation is proposed of a completely new land area character (developable areas according to Section 2(1)(j) of the Building Act); in the specific case of non-developable development areas in a developed land area, only an improvement in the state of landscape, natural and recreational values can be considered as development.

Section 5

Breakdown of land area according to character into localities

A land area may be broken down into localities according to the prevailing character of the land area.

Section 6

Breakdown of land area into areas with differing methods of use

(1) In a developable land area, areas are defined in particular according to the prevailing method of use:

a) developable production, including prevailingly areas for production and storage, mixed production areas, transport areas and technical infrastructure and areas for trade, services and employment opportunities,

b) developable habitable, including prevailingly mixed areas of housing and public amenities; these may also include other structures and equipment compatible with housing,

c) developable recreational, including prevailingly areas for resting, sport, recreation and relaxation.

(2) In a non-developable land area, areas are defined in particular according to the prevailing method of use:

a) non-developable natural, as close to the natural state as possible,

b) non-developable recreational, in which a harmonious landscape environment together with recreational, sports or instructive amenities together provide appropriate conditions for rest, sport, recreation and relaxation,

c) non-developable production, used in particular for intensive agricultural activities and the economic use of the land.

(3) A detailed specification of the areas with differing methods of use is determined in the land use plan.

Section 7

Level of use of a land area for development

The level of use of a land area for development is always determined for a specified part of developable land area, and this appropriately in relation to the locality, area, block and/or plot of land, and is determined as the highest permissible or lowest required.

Section 8
Public amenities

(1) Public amenities include civic amenities structures, equipment and plots of land according to Section 2(1)(k)(3) of the Building Act, and structures, equipment and plots of land for stores and services.

(2) Public amenities are defined in a land area by areas, lines or points.

Section 9
Transport corridors

Transport corridors in a land area are defined in independent areas, for example for railways and the superior communication system.

Section 10
More detailed breakdown of areas

(1) Areas with different methods of use can be broken down further according to the character of the land area.

(2) As a rule, areas of forest, non-forest near-to-natural areas, parks in the landscape, and extensively and intensively used agricultural areas are defined in a non-developable land area taking account of the landscape character and the vegetation cover.

(3) As a rule, parks, landscaped parts of other open public spaces, and park areas are defined in a developable land area taking account of the landscape character and the vegetation cover.

(4) Depending on the level of detail of the planning documentation, as a rule areas with a permanent water level, important lines of permanent vegetation, in particular alleys, bank vegetation along waterways and water surfaces, and windbreaks are also defined. It is also possible to define individual points, in particular important solitary trees or small groups of them, and prominent landscape elements.

(5) Garden colonies are defined – according to area, statute, current state and level of development – as part of non-developable or developable land area, as areas or localities.

(6) To meet the needs for pedestrian or bicycle traffic, permeability must be ensured through a network of purpose-built paths outside the developed land area; for the purposes of this Regulation these paths are considered to be an important part of the landscape in the sense of a different legal regulation[5].

CHAPTER II
Delimitation of open public spaces, division and consolidation of plots of land

Section 11
General principles for the delimitation of plots of land and of open public spaces

(1) During the delimitation of plots of land, care is paid to the definition of open public spaces corresponding to the character of the land area, in particular street open public spaces.

[5] Section 63 of Act No 114/1992, on the conservation of nature and landscape, as amended

(2) Plots of land are defined in such a way that their characteristics, in particular size, location and arrangement, enable their use for the proposed purpose, so that the character of the land area is protected, strengthened and respected. Plots of land may not be divided if this would prevent their purpose of use.

(3) Public open public spaces are defined so as to create a spatially and visually continuous system. The arrangement of open public spaces must ensure accessibility and the service of the land area and its permeability for pedestrians. Streets and paths are mutually linked as a priority.

(4) Embankments, landscaped areas and other public open spaces are as a rule established along watercourses in a developable land area. Free access for recreational purposes must be ensured along the Vltava and Berounka rivers.

Section 12
Definition of street open public space (street line and blocks)

(1) A street line defines the boundaries of street open public spaces and blocks in a developable land area. Blocks are split into construction (intended prevailingly for the development of buildings) and non-construction (intended prevailingly for non-construction purposes).

(2) Street open public spaces are defined as a basic network in terms of position (by axis), or globally (by street line). With a positional definition it is possible to determine the width of the street profile. In development and transformation land areas it is possible with the positional definition to define street open public spaces only as a connection between two places without a precise determination of the route. Beyond the definition of street open public spaces, it is possible to determine the supplementary permeability of the land area for pedestrian and bicycle transport across construction blocks.

Section 13
Town planning street types

From the perspective of town planning importance, the following town planning street types have been determined:

a) city avenues, which are the type of public open public space with the highest level of importance and significance in the system of open public spaces of the whole city, with a higher concentration of commercial and social activities, with a higher intensity of transport and with a higher level of amenities; together with important streets, they create the basic street network structure, the basic town planning structure of the city and form a basic element for orientation in terms of the city as a whole;

b) important streets, which are a type of public open public space with a high level of importance and significance in the system of open public spaces of the city with special importance for the more extensive parts of the city (districts), or individual localities;

c) local streets, which are a type of public open public space without special importance and significance in the system of open public spaces of the city; as a rule, these are streets that supplement the system of important streets and city avenues;

d) access streets with the lowest level of importance in the system of open public spaces of the city, intended in particular for local servicing of the land area.

Section 14
Widths of street open public spaces

(1) Unless the land use or zoning plan determine otherwise in accordance with Section 83(2), during the delimitation of new streets the width of the street open public space for the individual town planning types of streets according to Section 13 must be at least:

a) 24 m for city avenues,

b) 18 m for important streets,

c) 12 m for local streets,

d) 8 m for access streets;

when changes are made to existing streets, the procedure will be appropriate to the conditions in the land area.

(2) When determining the width of street open public spaces for new streets according to paragraph 1, the character of the land area will be taken into account.

Section 15
Plots of land intended for development

(1) Plots of land intended for development are defined so that access to them from a street open public space is ensured. The parameters of this access must correspond to the method of future use of the plot of land.

(2) The division and consolidation of plots of land must confirm to the street line.

CHAPTER III
Standard of open public spaces, principles of the arrangement of transport and technical infrastructure

Section 16
Standard of open public spaces

(1) When designing and establishing open public spaces, their habitable quality, the significance of the place and the needs of pedestrian travel must be taken into account.

(2) As a rule, a pavement will be established along the street line in street open public space - with the exception of street open public spaces where mixed traffic is permitted[6] (habitable zones or pedestrian zones[7]). The width of the pavement in the street profile must be determined with regard to the town planning types of streets according to Section 13, the character of the land area and the movement of people with limited mobility or orientation according to the legal regulation determining the requirements for ensuring barrier-free use of structures[8].

(3) Structures and equipment in an open public space are associated and placed to ensure that they do not unreasonably restrict pedestrian movement and to ensure the retention of a passage with a net width of at least 1.5 m, unless this is prevented by the spatial arrangement of the street profile. Elements of technical and transport infrastructure are associated on poles in particular. When addressing overhead lines in developed streets with a predominantly closed construction line, suspended lines will have priority over the placement of poles into the street space.

(4) Street lighting is provided in street open public spaces.

(5) City avenues and important streets according to Section 13 are as a rule equipped with alleys of trees. Unless the land use or zoning plan determines otherwise in accordance with Section 83(2), the axial distance between trees in a row is at most 25 m. When planting trees, the requirements determined in point 1 of Annex No 1 to this Regulation must be complied with.

(6) The routing and parameters of the transport and technical infrastructure must be in accordance with the standard of the open public spaces and the conditions of the arrangement and use of the land area of which they are part.

(7) Underground structures (tunnels, technical infrastructure equipment, garages etc.) must be located in the street open public space so that they enable the planting of trees. The rules for technical infrastructure networks are determined in Section 19.

---

[6] Section 6(3)(d) of Act No 13/1997, on roads, as amended
[7] Section 39 of Act No 361/2000, on road traffic, as amended
[8] Section 4(1) of Decree No 398/2009, on the general technical requirements for ensuring the barrier-free use of structures, as amended

Section 17
Requirements for transport infrastructure and transport amenities

(1) Surface level crossings for pedestrian or cycle paths and motor vehicle routes with the exception of motorways and roads labelled as roads for motor vehicles will be given preference over underpasses and overpasses, or these will be at least supplemented with surface level crossings.

(2) Crossings of pedestrian or cycle paths running outside the carriageway with motor vehicle routes at connections with secondary roads, supply lanes, the connections of structures to roads etc. will be, where the anticipated traffic intensity enables, designed primarily through pavements or footpath crossings respecting the spatial continuity of the pedestrian and cycle paths.

(3) The illumination of a crossing for pedestrians, location for crossing on foot or by bicycle, must be established to enable its operation independently from the adjacent public lighting.

(4) Bicycle traffic is primarily part of the road profile (the main transport space), while it may be separated on roads with higher transport importance and traffic intensity.

(5) Roads in areas with a low motor traffic intensity and higher demands on the sojourn quality of the open public spaces will be primarily designed as zones with restricted top speed with mixed operation of motorized and non-motorized transport.

(6) The placement of crash barriers along roads in a developable land area is prohibited, unless determined otherwise by a different legal regulation[9]. Temporary transport measures will be addressed appropriately.

(7) The placement of noise barriers and embankments in a developable land area is prohibited, with the exception of barriers and embankments along motorways, roads designated as roads for motor vehicles, railways and existing tramways running outside street open public spaces.

Section 18

Requirements for technical infrastructure and technical amenities

(1) The technical infrastructure network in a developable land area is located exclusively in street open public spaces. They can only be placed into non-construction blocks in justified cases and only under paved areas or along their edges. This provision does not apply for the connections for individual structures and for the placement of superior networks at greater depths. In sites and jointly addressed units of structures for individual housing it is also possible to locate a network serving exclusively to connect the structures of the site, respectively the jointly addressed unit, away from the street open public space.

(2) Electrical power distribution lines and electronic communications lines in a developable land area are located underground. For temporary structures at a building lot it is possible in justified cases to place these lines aboveground as temporary structures.

(3) Both underground and aboveground lines are concentrated in common routes (corridors, collectors). If a collector has been established in a land area, new and supplemented technical infrastructure networks are primarily placed into this collector according to technical possibilities.

(4) Technical infrastructure equipment in a developable land area is located primarily underground or as part of buildings. An appropriate procedure is followed away from developable land areas.

(5) In inundation areas, excepting their protected parts:

a) technical infrastructure networks except high and very high voltage power lines must be placed underground,

b) transformation, switching and heat exchange structures, gas regulation stations, electronic communication network access points and telephone exchanges are located so that their operating

[9] Decree No 104/1997, implementing the Act on Roads, as amended

spaces are at least 1 m above flood level.

Section 19

Requirements for spatial arrangement of technical infrastructure networks

(1) The spatial arrangement of technical infrastructure networks must comply with the minimum horizontal distance in parallel, the minimum vertical distance when crossing, and the minimum coverage according to the standards indicated in Section 84.

(2) The arrangement of technical infrastructure networks in street open public space must respect existing alleys of trees and enable their renewal and supplementation. During construction modifications to technical infrastructure networks, any existing spaces for planting trees must be maintained.

(3) When placing technical infrastructure networks, including connections, the minimum distance of the network from the base of tree trunks according to point 1 of Annex No 1 to this Regulation must be complied with.

(4) In newly established streets and during general reconstruction of existing streets with a width of over 12 m, a plantation belt for alleys of trees of at least 0.8 m in width must be defined; and also in narrower streets where it is possible depending on the spatial arrangement. In streets over 18 m in width, the minimum width of the plantation belt is 1.5 m.

(5) Technical infrastructure networks may not be located in a plantation belt, except for cross intersections; the placement of poles and public lighting is permissible. The protective zone of a technical infrastructure network may cross the edge of a plantation belt. Unless technical measures according to point 1 of Annex No 1 to this Regulation are used, a protective zone may cross the edge of the plantation belt by at most 0.2 m.

(6) If a technical infrastructure network runs parallel to a small watercourse, measures must be taken to ensure that the parallel course of the network and the drainage system does not result in the drainage of surface water into the backfill of the network. With unpaved and natural watercourses, where the watercourse may change direction, the network must be installed at the same spot height as under the bottom of the watercourse up to a distance of at least 6 m from the bank line.

CHAPTER IV

Placement of structures

Section 20

General requirements on the placement of structures

(1) During the placement of structures, the character of the land area must be taken into account, in particular the relationship between development and open public space, the ground plan dimensions of the neighbouring buildings and their heights.

(2) In squares and city avenues, buildings are as a rule located so that part of their ground floor is oriented towards the street open public space, directly connects to it from the height perspective, and is usable for trade and services.

(3) Structures on the boundary of open public spaces are primarily located so that they create a natural guideline for people with limited mobility or orientation according to the legal regulation governing

the requirements for ensuring the barrier-free use of structures[10].

(4) The placement of temporary structures must not cause the felling of trees in an open public space.

(5) Building lot structures used for construction or maintenance work must be placed and authorized only as temporary.

[10] Decree No 398/2009, on general technical requirements for the barrier-free use of structures, as amended

(6) In inundation areas, except their protected parts, structures must be placed so that they do not worsen flow and drainage conditions. The requirements of a different legal regulation11 are not affected by this.

Section 21
Building line

(1) The method of developing building blocks and the spatial relationship of a development to open public space is as a rule defined by a building line.

(2) A building line is a boundary defining, within the framework of a building block, the non-crossable boundary for the permanent development of buildings. A building line further determines the following parameters:

a) how much the development, which can or cannot be recessed, is recessed from the boundary;

b) the scope and degree of development of the boundary of the developable part of the block that must, may not, or can be coherent and complete.

(3) Depending on these parameters, the building line applied in a land area will prevailingly be:

a) closed, defining the boundary between the developable and non-developable parts of a block;

1. from which the development cannot be recessed and

2. which must be coherently and completely developed along its entire length;

b) open, which defines the boundary between the developable and non-developable parts of a block;

1. from which the development cannot be recessed and

2. which must not be coherently and completely developed along its entire length, or

c) free, which defines the boundary between the developable and non-developable parts of a block;

1. from which the development may be arbitrarily recessed and

2. which may be coherently and completely developed along its entire length.

Section 22
Placement of structures with regard to a street and building line

(1) Structures are located in accordance with the street line and the type of block according to Section 12. If these have not been defined by the land use or zoning plan:

a) in a land area where street open public spaces have been established, the street line and type of block are derived from a land use study or from existing open public spaces, taking into account the designation of street open public space in the land use analytical materials;

b) in a land area where no street open public space has been established, the street line and type of block are derived from a land use study, or are defined in the documentation for the issue of a land use decision[12].

[11] Act No 254/2001, on water, and on amendments to some Acts (Act on Water), as amended
[12] Parts C and D of Annex No 1 to Decree No 499/2006, on the documentation of structures, as amended by Decree No 62/2013 (situational drawing).

(2) Buildings, except buildings that are appropriately dimensioned and directly related to the character of open public spaces (e.g. public toilets, public transport equipment, kiosks etc.) may not be located on a plot of land that includes a street open public space.

(3) Structures are located in accordance with the building line according to Section 21. If this is not defined by a land use or zoning plan:

a) in a stabilised land area the building line is derived from a land use study or from the prevailing character of the development and its relationship to the open public space; if a building line cannot be clearly derived, it will be considered to be a free building line;

b) in a transformation and development land area, the building line is derived from a land use study, or is defined in the documentation for the issue of a land use decision[13].

(4) With a building line that requires the coherent and comprehensive development of the boundary of the developable part of a block, it is possible in justified cases (e.g. to ensure the permeability of a construction block) to interrupt the development with a gap with a maximum width of 4 m, unless the land use or zoning plan determines otherwise in accordance with Section 83(2).

Section 23
The space between a street and building line

(1) The space between a street and building line is as a rule landscaped or used for activities connected with the related open public space, and this in accordance with its character.

(2) In the space between a street and building line it is only possible to locate structures that form part of the landscaping and parterre, underground structures, structures for connections to technical and transport infrastructure, and parts of structures according to Section 24.

Section 24
Elements in front of a building line

(1) Unless a land use or zoning plan determines otherwise in accordance with Section 83(2), a building line may go beyond:

a) foundations, plinths, facades, structural elements that architecturally break up a façade, equipment and components, and additional thermal insulation of buildings by a distance of 0.3 m;

b) a cornice and roof by a distance of 1 m,

c) structures for advertising, and advertising and information devices according to Section 80,

d) bay windows and cantilevered parts of upper storeys by a distance of 1 m, and balconies, fixed awnings and entrance roofing by a distance of 1.5 m in front of the building line provided that they are at least 2.5 m from the neighbouring structure; these elements may together form at most one third of the surface of the façade adjacent to the respective construction line and for streets narrower than 12 m may not cross the street line;

e) entrance parts of structures by a distance of 3 m and the height of one storey provided that at the same time they do not cross the street line and so not exceed (overhang) 15 m^2 of developed area;

f) underground parts of a structure, as long as they also do not cross the street line;

g) aboveground structures and parts of structures to a height of 1.2 m from landscaped terrain, if they do not also cross the street line; railings do not count towards this height; the prescribed maximum height may be locally exceeded up to a height of 1.8 m, if this greater height results from placement on a slope.

[13] Parts C and D of Annex No 1 to Decree No 499/2006, on the documentation of structures, as amended by Decree No 62/2013 (situational drawing).

(2) Elements in front of a building line may not enter into the walking and driving clearance space of a road according to a different legal regulation[14] and may not narrow the width of the adjacent pavement to less than 1.5 m.

[14] Section 27 of Decree No 104/1997, implementing the Act on Roads, as amended.

Section 25
Height regulation

(1) The height arrangement is defined by determining development heights according to paragraph 2, by determining the binding maximum and minimum regulated height of buildings, or by determining the minimum and maximum number of storeys.

(2) Development heights determine the minimum and maximum regulated height of buildings and are determined as follows:

a) development height I 0 m – 6 m,

b) development height II 0 m – 9 m,

c) development height III 0 m – 12 m,

d) development height IV 9 m – 16 m,

e) development height V 12 m – 21 m,

f) development height VI 16 m – 26 m,

g) development height VII 21 m – 40 m,

h) development height VIII over 40 m;

The range of heights in a land area may be determined through stipulating one or more development heights. The maximum regulated height is determined for individual development heights throughout the defined area, while the minimum regulated height only along the construction line oriented towards the street open public space.

(3) Together with the determination of the height regulation in a land use or zoning plan, it is possible to determine the conditions under which it is possible to exceed a determined maximum regulated height, or go below a minimum regulated height, and this through determining the specific location or type of structure or general rules.

Section 26
Placement of structures with regard to height regulation

Structures are located in accordance with the height regulation determined according to Section 25. If no height regulation is determined in the land use or zoning plan:

a) in a stabilised land area the development heights are derived from a land use study or, in the case of development heights I–VII (according to Section 25(2)(a) to (g)), from the character of the adjacent development, taking into account the heights indicated in the land use analytical materials,

b) in a transformation and development land area the development heights are derived from a land use study, or in the case of development heights I–VII (according to Section 25(2)(a) to (g)), are determined in the documentation for the issue of a land use decision[12].

Section 27
Determining heights

(1) The regulated height of a building means the distance measured vertically from the lowest point of the adjacent ground level to the main cornice. The level of the main cornice means the intersection of the outer face of the perimeter wall and the upper edge of the roof covering or the upper edge of a parapet. In the case

of development on a slope, it is possible to determine the height separately for different parts of the structure.

(2) If not determined otherwise by a land use or zoning plan in accordance with Section 83(2), it is possible to build from the maximum regulated height:

a) a sloping roof with no more than two gables, or with attic storeys, with a maximum angle of 45° and a maximum height of 7.5 m;

b) a recessed storey with a maximum height of 3.5 m, recessed from the outer perimeter wall of the building oriented towards the construction line and one other perimeter wall by at least 2 m;

c) a different spatial solution for the roof that does not exceed the definition according to letters a) or b).

(3) If the land use or zoning plan does not determine otherwise in accordance with Section 83(2), spatial definitions according to paragraph 2 may be exceeded by dormer windows that do not go beyond the outer face of the perimeter wall of the building, are not higher than 2.5 m, do not occupy in total over one third of the area of the roof in the vertical projection and are located so that above them at least one third of the height of the roof in the vertical projection without protruding elements remains.

(4) If the land use or zoning plan does not determine otherwise in accordance with Section 83(2), the maximum height may be exceeded in justified cases by:

a) public buildings (civic amenities buildings),

b) buildings that in an urban exposed position (on corners, the axis of a square etc.) locally accentuate the town planning structure of the city (local prominent features), if this is not contrary to the character of the land area; the regulated height of a building may in this case by increased by a maximum of 2 storeys and at most over one third of the area of the last full storey.

Section 28
Clearance from neighbouring buildings

(1) A structure must be located so that it has sufficient clearance from the windows of habitable rooms of existing neighbouring buildings. Compliance with this requirement is demonstrated through compliance with the clearance angle according to point 2 of Annex No 1 to this Regulation for the windows of habitable rooms of existing neighbouring buildings.

(2) The requirement for clearance will not apply if it would prevent compliance with the conditions of spatial regulation determined in the land use or zoning plan or would prevent development in a stabilised land area in accordance with a building line; in such a case, it is possible to construct to the depth of the development and to a height corresponding to the surrounding development.

Section 29
Clearances of structures and rules for construction at the boundary of a plot of land

(1) Clearance from the boundary of a plot of land and the rules for the placement of structures at the boundary of a plot of land will apply exclusively for the placement of structures at the boundary with neighbouring developed plots of land and plots of land intended for development. These will not apply at the boundary with open public space and water areas.

(2) If the land use or zoning plan does not determine otherwise in accordance with Section 83(2), the clearance between the structure and the boundary of the neighbouring plot of land must be at least 3 m. This requirement will not apply:

a) where a construction line or land use or zoning plan creates an obligation to place a structure with a smaller clearance than 3 m or at the boundary of a plot of land;

b) if such method of development is usual at that location, corresponds to the character of the land area or arises from the method of parcelling;

c) between plots of land that form a jointly addressed unit,

d) for a structure or its part if less than 2.5 m in height, or

e) for a structure or its part if less than 3.5 m in height and if the length of the edge adjacent to one neighbouring plot of land is less than 9 m and to all neighbouring plots of land less than 15 m; these conditions must be complied with in total for all structures, both newly placed and existing.

(3) The minimum clearance from the boundary of a plot of land may be reduced by a roof by a maximum of 0.5 m, by additional building insulation by a maximum of 0.3 m and by the underground part of a structure up to the boundary of the plot of land.

(4) If a structure is located at the boundary of a plot of land, there may not be any structural openings in the wall of such structure oriented towards the neighbouring plot of land, and water must be prevented from dripping and snow from falling onto the neighbouring plot of land.

(5) Where open space is created between structures, this must be accessible for maintenance purposes.

(6) The clearances of structures must also comply with the requirements of other legal regulations[15].

Section 30
Requirements for fencing

(1) The fencing of plots of land at a boundary with an open public space must suitably correspond to the fencing usual at that location in terms of its spatial parameters and character.

(2) In a development that recedes from the boundary of an open public space, the fencing at the boundary with the open public space may be either non-transparent with a height up to 1.2 m, or transparent with a height up to 2 m, potentially with a non-transparent part with a height up to 1.2 m. Non-transparent fencing up to a height of 2 m may be used if required to comply with the requirements determined by a different legal regulation[16].

(3) In a development that does not recede from the boundary of an open public space, the fencing at the boundary with the open public space may be non-transparent with a height up to 3.5 m.

(4) The fencing at the boundary of a plot of land inside a construction block may not exceed a height of 2 m above the highest of both levels of the adjacent terrain. This provision does not apply for the boundary between plots of land inside jointly addressed units.

(5) The height of fencing according to paragraph 2 to 4 may be reasonably increased if higher fencing is usual at the location and if it is required by another legal regulation or a special purpose of the fenced real estate.

(6) The height of fencing according to paragraph 2 and paragraph 4 may be increased in places up to a height of 2.5 m if such greater height is due to location on a slope.

(7) Fencing in a flow inundation area must enable the passage of floodwater, including objects carried by the flood and silts.

CHAPTER V
Connecting structures to transport and technical infrastructure

Connecting structures to transport infrastructure

Section 31

Connections to roads

[15] For example, Act No 224/2015 on prevention of major accidents caused by dangerous chemicals or chemical mixtures and on amendment of Act No 634/2004 on administrative fees, as amended (Act on Prevention of Major Accidents).
[16] Government Decree No 272/2011, on health protection against adverse effects of noise and vibration.

(1) According to type and need, structures will be provided with adequate capacity connections to a road whose parameters can accommodate this connection. The connection to such road must be completed at the latest before the announcement of use of the structure, or the issue of an occupancy permit for the structure.

(2) Where the anticipated volume of traffic allows, the connection is primarily through a pavement or path crossing, potentially in a different way that does not impact the comfort of the crossed pavement or path in the sense of Section 17(2).

(3) Entry and exit ramps for common garages may not be placed in a street open public space. In justified cases, it is possible to place ramps located longitudinally with the road between the carriageway and the pavement in a street open public space. This provision does not apply to public garages.

Section 32
Parking capacities

(1) For structures, with the exception of temporary structures for a period of at most one year, it is necessary to establish tied and visitor parking spaces in numbers according to this Regulation. The following are determined for structures:

a) the minimum required and

b) the maximum permissible number of parking spaces.

(2) The minimum required and the maximum permissible number of parking spaces is determined as a percentage of the basic number of parking spaces. If the land use or zoning plan does not determine otherwise in accordance with Section 83(2), a percentage is applied based on the centrality of the land area and the walking distances to public transport stops in Annex No 3 to this Regulation, separately for:

a) tied parking spaces for housing and

b) tied parking spaces for other purposes of use and visitor parking spaces for all purposes of use;

for structures spread over more than one zone, the numbers of parking spaces are determined according to the principles for the zone with the lower percentage for the required minimum. The resulting minimum required as well as the maximum permissible number of parking spaces is rounded to whole parking spaces as follows: 0.5 parking spaces and more are rounded up to whole parking spaces, 0.5 parking spaces and less are rounded down to whole parking spaces.

(3) The basic numbers of tied and visitor parking spaces for a structure or set of structures are determined by the total parking spaces for separate purposes of use according to Annex No 2 to this Regulation. For structures or sets of structures with a combination of multiple purposes of use, it is possible in justified cases to reduce the basic number of visitor parking spaces taking into account their interchangeability.

(4) Parking spaces according to paragraph 1 must be completed at the latest before the announcement of use of the structure, or before the issue of the occupancy permit for the structure.

Section 33
Form and character of parking

(1) Parking spaces are located on building lots, on plots of land of a jointly addressed unit, or where determined by a land use or zoning plan.

(2) It is possible to place parking spaces outside a building lot, or outside a jointly addressed unit, if the structure is being placed into an existing development and in view of the local conditions it is not possible to establish parking spaces on the plot of land of the structure; in such a case, the parking spaces must be located within a walking distance of at most 300 m.

(3) Tied parking spaces are located away from a street open public space. For jointly addressed units of a development with a prevailing purpose of use as housing and with up to 3 storeys, it is also possible to locate tied parking spaces in a street open public space while complying with the requirements of paragraphs 1 and 2, appropriately taking account of the character of the street profile.

(4) Visitor parking spaces may also be located appropriately taking account of the character of the street profile in a street open public space while complying with the requirements of paragraphs 1 and 2.

(5) Tied parking spaces for the purpose of use for housing, except low-rise developments up to 3 storeys and structures for individual housing, must be designed in the form of closed or semi-open garages or parking stackers, while a closed garage means an interior space enclosed by building structures and a semi-open garage means an exterior space prevailingly closed and defined by building structures; the garage must be roofed over the parking spaces for vehicles.

(6) Parking spaces must be individually accessible for the entry of vehicles, with the exception of parking spaces for structures for individual housing, if established for each structure separately on its plot of land.

(7) Visitor parking spaces must be publicly accessible; however, it is possible to determine rules for their use.

(8) Surface car parks are supplemented with trees; if the land use or zoning plan does not determine otherwise in accordance with Section 83(2), they must be supplemented with a minimum number of one tree per eight parking spaces inside the car park. If trees cannot be planted inside the car park due to technical reasons, they may be planted elsewhere on the building lot or as part of a jointly addressed unit.

(9) If the main access route for pedestrians to civic amenities buildings leads across a surface car park, the path for the pedestrians must comply with the requirements of the legal regulation governing the requirements to ensure the barrier-free use of structures[10].

Section 34
Requirements for storing bicycles

(1) Structures are usually equipped with areas for storing bicycles with a capacity according to the specific purpose and location of the structure. In particular, areas are established for storing the bicycles of visitors to civic amenities buildings.

(2) Areas for storing the bicycles of visitors are established as publicly accessible and must allow the locking of the bicycles. The location for the storage of the bicycles of the permanent users of structures are as a rule established away from the publicly accessible space.

Connecting structures to technical infrastructure

Section 35
General Requirements

Every connection of a structure to the public water mains and electricity supply must be done in such a way that they can be switched off independently. The locations of the valves and external water supply points must be accessible and permanently labelled.

Section 36
Supply of drinking water and wells

(1) Structures must be connected to the public water mains or to an individual source of drinking water according to type and need.

(2) Structures are connected to the public water mains as a rule using a single connection point. The connection of a larger structure using multiple connection points is possible if appropriate for technical and economic reasons.

(3) A well for individual water supply must be located and operated to prevent a significant reduction in the usable quantity of underground water in the surrounding catchment area. Wells must be secured against the ingress of surface water.

(4) A well for individual drinking water supply must be located in an environment where there is no source of possible pollution or any threat to the quality of the water in the well.

(5) The shortest distance between a well for individual drinking water supply from sources of possible pollution is given in point 3 of Annex No 1 to this Regulation; it is possible to determine a smaller distance depending on the specific hydrogeological conditions based on the result of a hydrogeological survey or hydrogeological assessment.

(6) In inundation areas, except their protected parts, wells serving as the sole source of drinking water must be secured against the ingress of water during a flood up to a height of 0.5 m above the flood level.

Section 37

Liquidation of wastewater, cesspits and small treatment plants

(1) According to type and need, structures must be connected to the public sewerage or a wastewater treatment plant[16], potentially a small treatment plant according to the conditions determined in paragraph 3, or may be equipped with a cesspit according to the conditions in paragraph 4. In specially justified cases, when it is not possible to use the indicated methods for wastewater liquidation (e.g. for building lot structures, outdoor sports facilities, substations, zoning stations, public transport termini), it is possible, on condition of compliance with other legal regulations[17], to resolve the liquidation of wastewater using special technical systems (chemical, separation etc.)

(2) Structures are connected to public sewerage as a rule through a single sewerage connection. The connection of multiple structures through a single connection point or the connection of a larger structure through multiple connection points is possible if appropriate for technical and economic reasons.

(3) Small treatment plants may only be established where there is the possibility of discharging treated wastewater through separate discharge pipes into a watercourse, or potentially discharging through soil layers into underground water while complying with the requirements of a different legal regulation[18]. Wastewater must not negatively impact neighbouring structures. A small treatment plant is considered to be a wastewater treatment plant up to 50 population equivalent.

(4) Cesspits may be established only in clearance gaps for individually located structures for individual housing and structures for family recreation, potentially as the replacement for existing cesspits for these structures, and this only in justified cases where wastewater cannot be discharged into the sewerage network and at the same time due to technical reasons it is not possible to establish a small treatment plant, and also for structures in building lots, allotments, outdoor sports facilities, technical infrastructure and for small structures in park areas.

(5) Cesspits or small treatment plants must be located and designed to allow the future connection of the structure to the sewerage system, if established within an accessible distance or if its future establishment can be anticipated in view of the character of the land area. Cesspits or small treatment plants are located to ensure that their contents can be collected.

16 Decree No 428/2001, implementing Act No 274/2001, on water mains and sewer systems for public use and on amendments to some other Acts (Water and Sewerage Act).

17 Act No 254/2001, on water and on amendments to some Acts (Water Act), as amended. Act No 185/2001, on waste and on amendments to some Acts, as amended.

18 Section 38(7) of Act No 254/2001, on water and on amendments to some Acts (Water Act), as amended.

Section 38
Storm water management

(1) Every structure and building lot must have a storm water management system:

a) primarily through absorption, if the hydrogeological conditions, size of the plot of land and its prospective use demonstrably allow this and if neighbouring structures and plots of land are not threatened by this absorption;

b) if absorption is demonstrably not possible, then through its retention and regulated drainage through a compartmentalised system for the drainage of storm water into surface water, or

c) if both absorption and drainage into surface water is demonstrably not possible, then through its retention and regulated discharge into the sewerage system.

(2) The minimum retention (the total volume of retention, measures such as furrows in greenery, open ditches, vegetation roofs, tanks, retention pipes or pipe retention etc.) for the regulated drainage of storm water must be such that it does not permit a flow greater than 10 l/s from a hectare of land during a thirty-minute ten-year level of rain, unless the water flow manager determines otherwise.

(3) The absorption or drainage of storm water according to paragraphs 1 and 2 must be resolved on a building lot, within the framework of a jointly addressed unit, potentially within the framework of a wider land area, for which the absorption or drainage of storm water is resolved jointly in the land use or zoning plan. Retention measures according to paragraph 2 must be located above flood level, unless they are retention measures for construction plots of land or parts of construction plots of land in inundation areas.

PART THREE
CONSTRUCTION REQUIREMENTS

CHAPTER I
Basic principles and requirements

Section 39

(1) A structure must be designed and constructed in compliance with the principles of economy appropriate for the purpose of use and in compliance with basic requirements, which are:

a) mechanical resistance and stability,

b) fire safety,

c) hygiene, protection of health and the environment;

d) protection from noise,

e) safety and accessibility in use,

f) energy savings and thermal protection.

(2) A structure must comply with the requirements indicated in paragraph 1 with regular maintenance and the action of generally foreseeable influences for the planned life of the structure.

(3) The products, materials and constructions designed and used for the structure must ensure that the building meets the requirements according to paragraph 1.

CHAPTER II
Mechanical resistance and stability

Section 40
General requirements

(1) A structure must be designed and constructed so that – with properly performed normal maintenance – the effects of loading and adverse environmental effects, including technical seismicity, to which it is exposed during construction and use cannot cause:

a) the sudden or progressive collapse of, or other destructive damage to, any part of the building or adjacent structures;

b) impermissible deformation or vibration of the construction, which could affect the stability of the structure, the mechanical resistance and performance of the structure or its part, and that would lead to reduction in the durability of the structure;

c) damage or threat to the serviceability of connected technical equipment as a result of deformation of the load-bearing structure,

d) a threat to the serviceability of roads and railways within the range of the structure, and a threat to the safety and flow of traffic on the roads and railways adjacent to the site,

e) a threat to the serviceability of the technical infrastructure network within the range of the structure and the site,

f) a breach of the structures to an extent disproportionate to the original cause, in particular through explosion, impact, overload or consequence of human error, which could have been prevented or at least reduced without disproportionate difficulty or cost;

g) damage to structures due to the adverse effects of underground water caused by a rise or fall of the level of an adjacent watercourse or dynamic effects of flood flows, or hydrostatic buoyancy during flooding;

h) a threat to the flow rate of watercourses, or valley profiles, bridges and culverts; these requirements are considered complied with if the procedure adopted is according to the standards indicated in Section 84.

(2) For structures used to ensure the supply of energy and other structures whose properties future users cannot influence, the construction must be designed and implemented to ensure that it does not result in an unforeseen permanent or temporary threat to the serviceability of the structure as a whole.

(3) The building construction and products installed in the structure must be designed and implemented so that they comply - for the design life of the structures - with the required purpose and withstand all the effects of loading and adverse environmental effects, including predictable extraordinary loads that may normally occur during the construction and use of the structures.

(4) Structures located within the range of undermining or other technical seismicity are also designed taking into account these impacts.

Section 41
Structure foundations

(1) A structure must have foundations implemented in a manner corresponding to the underlying circumstances identified by a geotechnical and hydrotechnical survey, while they must not threaten the

stability of any other structure. These requirements are considered complied with if the procedure adopted is according to the standards indicated in Section 84.

(2) The implementation of the foundations of structures must take into account potential induced changes to the foundation conditions on adjacent plots of land intended for development and potential changes in underground water.

(3) Foundations must be designed and implemented so that they are protected from aggressive water and harmful substances according to need.

(4) For structures whose foundations are exposed to temperature changes, in particular ovens and freezers, or are exposed to vibration, the effects of these changes on the properties of the foundation soil must be taken into account.

(5) Foundations for structures with production machinery and equipment that send shocks and vibrations into the foundation soil must take these influences into account.

CHAPTER III
Fire safety

Section 42

Fire safety requirements are determined by a different legal regulation[19].

CHAPTER IV
Hygiene, health and environmental protection

Section 43
General requirements

(1) A structure must be designed, implemented, used and potentially removed in such a way that it does not threaten the life and health of people or animals, safety, the healthy living conditions of its users or the users of surrounding structures, and so it does not pose a threat to the environment over the limits contained in other legal regulations, in particular as a consequence of:

a) the release of substances that are dangerous for the health and lives of people and animals and for plants,

b) the presence of dangerous particles and gases in the air,

c) emissions of dangerous radiation, in particular ionising,

d) the adverse effects of electromagnetic radiation,

e) air pollution, pollution of surface or underground water and soil,

f) inadequate disposal of wastewater and smoke,

g) improper waste disposal,

h) the presence of moisture in building structures or on the surface of constructions inside structures,

i) insufficient thermal insulation and sound insulation according to the character of use of rooms,

j) inappropriate photometric properties,

k) the presence of biotic pests and fungi in constructions and on their surfaces.

(2) A structure must resist the adverse effects of its internal and external environment, in particular the effects of soil moisture and underground water, atmospheric and chemical effects, radiation, shocks and biotic pests. If justified by the particular purpose of the building (for example structures for growing plants and storing plant products), the floor of the structure need not be insulated from soil moisture or it may be

built without a floor.

19 Decree No 23/2008, on the technical conditions for the fire protection of structures, as amended by Decree No 268/2011; Decree No 246/2001, on determining the conditions for fire safety and the performance of state fire supervision (Decree on Fire Prevention).

(3) The level of the floor of a habitable room must be at least 0.8 m above the highest level of the underground water at the location of the structure, unless the room is permanently protected from the adverse effects of water through technical means.

Section 44
Heights and areas of rooms

(1) The ceiling height of habitable rooms must be at least 2.6 m. The minimum ceiling height of a habitable room may be reduced to 2.4 m if the apartment includes at least one habitable room with a height of at least 2.6 m and a floor area of over 16 m^2.

(2) The ceiling height of residence rooms must be at least 2.6 m, for structures for family recreation the ceiling height of residence rooms must be at least 2.4 m.

(3) When structures are modified, in attic storeys the ceiling height of all residence and habitable rooms must be at least 2.3 m.

(4) In habitable and residence rooms with a sloping ceiling, the lowest permissible ceiling height must cover at least half the floor area of the room.

(5) If an apartment consists of a single habitable room, it must have a floor area of at least 16 m^2.

(6) The floor area of rooms does not include any area with ceiling height less than 1.2 m.

Section 45
Insolation, daylighting and artificial lighting

(1) For apartments and residence rooms that so require due to their location, character and method of use, the requirements for insolation determined according to paragraph 2 must be complied with. If the character of an existing development does not permit compliance with the requirement for insolation, when designing the apartments at least 80% of the designed apartments must be insolated.

(2) An apartment is insolated if the total of the floor areas of its insolated habitable rooms equals at least one third of the total of the floor areas of all its habitable rooms. The standards indicated in Section 84 are used when assessing insolation.

(3) In proposed habitable rooms and in long-term accommodation units, the level of daylighting according to the standards indicated in Section 84 must be complied with.

(4) In habitable rooms and long-term accommodation units affected by a proposed structure, the following must be complied with:

a) a level of daylighting according to the standards indicated in Section 84 or

b) a glazed plane daylight factor according to the standards indicated in Section 84.

(5) In an existing development affected by a newly located structure in a clearance gap or a modification of a structure in a clearance gap fronting onto a street, a level of daylighting or glazed plane daylight factor corresponding to the level of shading that would occur with a fully continuous development (height and depth of the development corresponding to the surrounding development) must be complied with in habitable rooms and long-term accommodation units.

(6) All proposed residence rooms as well as residence rooms in structures affected by a proposed structure must have ensured - according to type and need - daylighting determined by a legal regulation that determines the conditions for occupational health[20], by a legal regulation that determines the hygienic requirements for spaces and

20 Government Regulation No 361/2007, determining the conditions for occupational health, as amended

the operation of equipment and establishments for the upbringing and education of children and young people[21], and must comply with the daylighting value determined according to the standards indicated in Section 84.

(7) The total of the areas of window openings that illuminate a habitable room and a long-term accommodation unit with daylight, may not be less than 1/10 of the floor area of the room. The area of the window openings is determined from the structural dimensions of the windows.

(8) In buildings with habitable rooms, the value of artificial lighting according to the standards indicated in Section 84 must be complied with.

Section 46
Ventilation and heating

(1) Habitable and residence rooms must be provided with sufficient natural or forced ventilation complying with the values indicated in point 4 of Annex No 1 to this Regulation, and must be adequately heated with the possibility of temperature regulation.

(2) Residence rooms, except rooms in structures for family recreation and accommodation units, must be ventilated in such a way that a maximum permissible carbon dioxide concentration of 1 500 ppm in the presence of people is maintained.

(3) Toilets, spaces for personal hygiene and spaces for cooking have effective forced ventilation in accordance with the values indicated in point 4 of Annex No 1 to this Regulation, and must be heated with the possibility of regulating the heat supply. Pantries and storerooms for food have effective forced ventilation.

(4) Interior common areas and interior communication areas of a building must have forced ventilation.

(5) Apartments and other rooms in residential buildings and rooms in accommodation units must not be ventilated into common areas and communication areas.

(6) Natural ventilation of the appurtenances of an apartment is also permissible from lightwells and ventilation shafts, if they have a floor plan of at least 5 m2 and the length of the shorter side is at least 1.5 m. Their bottom must be accessible, easy to clean, and must have an outflow with a valve to prevent smells. The placement of technical equipment into lightwells and ventilation shafts must not threaten their function and technical parameters.

(7) It is only possible to connect into lightwells and ventilation shafts the ventilation of rooms of the same character throughout the height of the shaft, while flue gases from appliances must not be discharged through such shafts. It is only possible to place a chimney in lightwells and ventilation shafts in compliance with the requirements in Section 47 in justified cases, while retaining their function.

(8) HVAC equipment must be designed for rooms that do not have the possibility of natural ventilation, respectively for rooms that must be ventilated because of hygiene, fire protection or safety regulations, or where the requirement for ventilation is based on the requirements of the equipment in use. Their operation must be safe, economical, and must not threaten the environment and the health of people or animals. The HVAC equipment must permit the required regular cleaning and maintenance. When vacuum ventilation is use, a sufficient supply of air must be ensured.

(9) If there is the danger of condensation during the transport of air with a high content of water vapour, the air conduit must be watertight, sloped and equipped with drainage.

(10) The HVAC equipment in premises with a high intensity of air exchange must be provided with heat recovery from the exhaust air using equipment with proven sufficient effectiveness, unless it is demonstrated, for example through an energy audit, that such solution is not appropriate in the given circumstances.

21 Decree No 410/2005, on the hygiene requirements for premises and operation of equipment and establishments for the education of children and adolescents, as amended by Decree No 343/2009.

(11) Rooms in which there is a combustion device, an appliance that draws air from the room, or a fuel-burning appliance must be provided with a sufficient quantity of air for combustion. For fuel-burning appliances the quantity of air for combustion must be equal at least to the flow of air for combustion for the rated output and type of appliance.

(12) When heat is supplied from an external source, its outlet must be provided with a main valve for the heating medium.

Section 47
Chimneys and flues

(1) Chimneys and flues must be designed and implemented in such a way that under all the operating conditions of the connected fuel-burning appliances, the safe removal and dispersion of combustion products into the open air is ensured so that they do not accumulate, and so that emissions limits determined by another legal regulation[22] applying to the source of pollution in question are not exceeded. During the operation of chimneys any impact of surrounding structures on the function of the chimney must be excluded.

(2) The combustion products of fuel-burning appliances must be conducted away over the roof of the building or outside wall into the open air in compliance with the permissible level of pollution determined by another legal regulation[22]. The opening of the outlet for the combustion products must be designed and implemented in such a way that under all operating conditions of the connected fuel-burning appliances the safe removal and dispersion of combustion products into the open air is ensured.

(3) The distance of a chimney and flue from building structures must comply with the requirements determined by a legal regulation regulating the fire protection conditions of structures[23].

(4) In the combustion product path there must be inspection and potentially collection, sweeping or cleaning openings for the inspection and cleaning of the chimney and flue.

(5) For chimneys inspected and cleaned through the mouth of the chimney flue, permanent access must be ensured.

(6) Free standing chimneys must - from the perspective of gas tightness - comply with the requirements according to the standards indicated in Section 84.

Section 48
Water mains connections and internal water system

(1) A water mains connection for drinking water for public consumption and an internal water system for drinking water must not be connected to any other water source. A water mains connection must be provided with equipment to prevent the possible return of dirty water from the internal water system.

(2) The water mains connection pipes must be installed at a non-freezing depth or must be protected against freezing.

(3) The main valve for the internal water system is installed before the water meter; it must be accessible and its location must be visibly and permanently marked.

(4) If a structure is designed to be supplied with both drinking and non-drinking water, the internal water system must also be separated.

(5) The pipes for cold water, and distribution and circulation pipes for hot water must be thermally insulated.

Pipes subject to corrosion must be protected against it.

Section 49

Sewerage connections, cesspits and internal drains

(1) If the sewerage for public use is separated compartmentalised, must be also the internal drains compartmentalised.

(2) The sewerage connection pipes must be installed at a non-freezing depth or must be protected against freezing.

[22] Act No 201/2012, on air protection, as amended.

[23] Section 8 of Decree No 23/2008, on the technical conditions for the fire protection of structures, as amended by Decree No 268/2011

(3) Cleaning fittings must not be installed in rooms in which a potential leakage of wastewater could pose a threat to health conditions during the use of the structure.

(4) In rooms and in spaces with wet floor cleaning, water tanks and furnishings that are not connected to the internal sewerage system must be equipped with a floor drain. If the type of operation so requires, the drain is provided with a dirt trap (for fats, oils, solids etc.).

(5) The ventilation pipes of internal drains must not have outlets into chimneys, vents, plumbing shafts and attic spaces, and must run at least 0.5 m above the level of the roof covering, in the case of terraces and other pedestrian areas the ventilation pipes of internal drains must be located in such a way that they do not inconvenience or pose a threat to their surroundings.

(6) Cesspits must be watertight, without the possibility of any outflow, and also provided with ventilation.

Section 50
Sanitary facilities

(1) An apartment must be equipped with at least one room with a toilet and one bathroom (sanitary facilities). The toilet must not be directly accessible from a habitable room or from the kitchen, if it is the only toilet in the apartment.

(2) Structures with more than three apartments must be equipped with a utility room with a sink for cleaning the common parts of the building.

(3) Commercial structures with a sales area of over 5 000 m2 must be equipped with a toilet for public use.

(4) In accommodation units, sanitary facilities are established as a rule. If it is not installed, there must be an adequate number of bathrooms and toilets separated for men and women on each storey.

(5) In catering services premises, a separate room with a toilet with an entrance hall and sink must be provided for the public, as a rule separated for men and for women. This provision also applies to buildings with accommodation units, where catering services are provided or where social or cultural activities are operated.

(6) For structures with an assembly space, a separate room with a toilet and an entrance hall and sink, separated for men and for women, must be provided for the public. The requirements for the minimum number of sanitary facilities are indicated in point 5 of Annex No 1 to this Regulation. Sanitary facilities for staff are as a rule established separately from such facilities for the public.

Section 51
Waste

(1) Structures must be equipped with a room for storing waste with sufficient capacity for the required purpose of the structure, or must be equipped with a place for storing waste containers situated on a building lot. The room for waste must be ventilated.

(2) In the case of jointly addressed units of individual housing structures, or allotments or cottage settlements, it is possible to locate a common place for a sufficient volume of containers for mixed municipal waste within walking distance from the building lot.

CHAPTER V
Protection from noise and vibration

Section 52

(1) Structures must be designed in such a way that they comply with requirements for protection from noise and vibration determined by a legal regulation regulating the protection of health from adverse effects of noise and vibration[15].

(2) During changes to completed structures or the construction of new structures in clearance gaps, there must be at least one habitable room in each apartment facing the outdoor space where hygiene limits for noise are not exceeded for this room in the outdoor protected space of the structure[24].

(3) Walls, partitions and ceilings together with floors and surfaces are compliant from the perspective of sound insulation if their airborne and impact sound insulation complies with requirements according to the standards indicated in Section 84.

(4) In buildings with habitable and residence rooms, all built-in technical equipment producing noise and vibration must be located and installed in such a way as to limit the transfer of noise and vibration into the building structure and their spread, in particular into the protected interior space of the structure.

(5) Plumbing pipes must be routed and secured in such a way that the noise produced by their use is not transferred into the protected interior space of the structure, and also so that they do not pick up noise from other sources.

CHAPTER VI
Safety and accessibility in use

Section 53
General requirements

(1) Structures must be designed, implemented, used and potentially removed in such a way that this does not threaten the safety of their users or the users of neighbouring structures. When constructing structures, there must not be any disproportionate restriction of access to adjacent structures or plots of land, or to technical infrastructure networks and firefighting equipment over the usual level.

(2) The requirements concerning the barrier-free use of structures are determined by a different legal regulation[10].

(3) Public open public space and roads temporarily used as a building lot while retaining their use by the public must be safely protected and maintained for the duration of the period of shared use. Public spaces and roads may only be used for a building lot within and for a determined essential scope and time. After the end of their use as a building lot they must be returned to their previous or designated state. During the construction and use of structures the safety of traffic on roads and railways must not be threatened.

Corridors

Section 54
Internal corridors

(1) The main internal corridors in buildings with habitable or residence rooms must allow the transport of objects with dimensions of 1.95 × 1.95 × 0.8 m; in buildings in which medical and social care is provided, they must enable the transport of objects with dimensions of 1.95 × 1.95 × 0.9 m. This requirement does not apply in individual housing structures and in structures for family recreation.

(2) The main entrance doors to apartments and the doors of residence rooms must have a clear width of at least 0.8 m.

[24] Section 30(3) of Act No 258/2000, on the protection of public health and on amendments to related Acts, as amended.

Section 55
Elevators

(1) Structures are fitted with elevators according to type and need[25].

(2) Elevators must be fitted in new buildings with entrances to apartments on the fifth or higher aboveground storey. When modifications are made to completed structures, elevators need not be fitted or existing elevators extended if the entrances to apartments are not located more than one storey higher than the existing level.

(3) The elevator shaft may not be used for ventilation for spaces not related to the elevator.

Section 56
Stairways and ramps

(1) Every storey must be accessible through at least one stairway or inclined ramp, with the exception of storeys accessible directly from ground level.

(2) Stairways and ramps must comply with the values indicated in point 6 of Annex No 1 to this Regulation; the requirements of another legal regulation are not affected by this[19].

(3) If natural lighting is not provided for the main building stairway, it must be fitted with emergency lighting.

(4) Spaces intended for occasional use by a limited number of people may be fitted with a ladder stairway, the width of which must be at least 0.55 m.

Section 57
Parking spaces in garages

(1) The ceiling height in garages must be at least 0.2 m greater than the height of the highest anticipated vehicle, however at least 2.2 m. Along the rear wall of tied perpendicular or tied oblique parking spaces, it is possible to reduce the ceiling height to 1.8 m to a depth of 0.7 m. Ceiling height is understood to be the free height of the interior space of a structure between its floor and ceiling, into which no parts or equipment of the structure intrude.

(2) The basic dimensions of the individual parking spaces must be 2.5 × 5 m with perpendicular and oblique positioning and 2 × 5.75 m with lengthways positioning; the basic dimensions may be appropriately modified according to the size of the anticipated vehicles, the positions of the individual parking spaces, and the structural/technical parameters of the garage. This is without prejudice to the provisions of another legal regulation[10].

(3) The parameters of an internal roadway must enable the entry of the anticipated vehicles into the individual perpendicular and oblique parking spaces by driving in a curve in the forward direction without having to reverse at all.

Protection from falls and slipping

Section 58
Guardrail

(1) The edge of the walking area of a structure facing open space and to which access is possible must be fitted with a guardrail or other barrier that protects people from falling. The parameters are determined by the values indicated in point 7 of Annex No 1 to this Regulation. This requirement does not apply to areas only accessible for their maintenance.

[25] Government Regulation No 27/2003, determining the technical requirements for elevators, as amended.

(2) A guardrail need not be fitted if:

a) it would prevent the basic operation for which the area is intended, in particular for platforms, loading ramps, swimming pools, quays and stages;

b) the open space is covered by a construction complying with the parameters determined in point 7 of Annex No 1 to this Regulation;

c) the depth of the open space is at most 3 m and along the open edge of the walking space there is a non-accessible safety zone at least 1.5 m wide, which is clearly defined through measures determined in point 7 of Annex No 1 to this Regulation.

(3) If there is a risk that somebody could slip or fall under the guardrail, the floor must be fitted with a protective strip at least 0.1 m high.

(4) Inclined guardrails of stairways and inclined ramps must be fitted with handrail.

(5) Window ledges in habitable and residence rooms, under which there is open outdoor space over 0.5 m deep, must be at least 0.85 m above floor level or must be supplemented with a guardrail or other fixed barrier according to paragraph 1.

(6) Glazing fulfilling the function of guardrail or barrier according to paragraph 1 may not, through its properties, pose a danger to the life and health of people or animals, in particular in the event of a shock or impact.

Section 59
Slip-resistance

(1) The floors of all habitable and residence rooms and the floors of balconies, terraces and loggias must have an anti-slip surface complying with coefficient of friction values or pendulum coefficient of friction values or slide angle values according to the standards indicated in Section 84.

(2) The surface of stairways, landings and ramps must have an anti-slip surface complying with coefficient of friction values or pendulum coefficient of friction values or slide angle values according to the standards indicated in Section 84.

(3) The design and implementation of the wear layer is also assessed from the perspective of slip-resistance due to changes caused by moisture.

(4) The anti-slip treatment of stairway treads and landings, unless implemented over the whole area, may not rise more than 0.003 m above the surrounding surface. Its edge may not be more than 0.02 m from the leading edge of the treads and landings.

Section 60
Protection from falling ice and snow and water flowing from roofs

Roofs must capture and divert rainwater, snow and ice in such a way that they do not pose a threat to road users and people and animals in the adjacent area.

Protection and safety when implementing and using selected technical equipment networks

Section 61
Penetrations

All entrances for technical equipment networks to structures or their parts under ground level must be designed in such a way that the penetration of gas is prevented.

Section 62
Gas connections and gas consumption equipment

(1) For gas connections and gas consumption equipment, only material that corresponds to the purpose of use, the type of media supplied and the given operating pressure may be used.

(2) Gas consumption equipment must be designed and implemented with regard to possible risks in such a way that their use and method of implementation does not pose a threat to the life and health of people or animals.

(3) The main gas valve must be permanently accessible and permanently visibly identified.

(4) Gas pipes are placed in protective structures:

a) to provide protection from mechanical damage or corrosion,

b) when passing through hollow and inaccessible structures or

c) when passing through perimeter walls and foundations.

(5) Inspections, revisions and tests of gas equipment are determined by another legal regulation[26].

Section 63

Connecting structures to distribution networks, internal power systems and internal electronic communications systems

(1) If the connection of a structure to the electricity grid is proposed, then the internal high-current power systems are connected to the grid through a connection or by expanding the electricity grid.

(2) If the connection of a structure to an electronic communications network is proposed, then the internal electronic communications system is connected to this network by connecting the electronic communications network through a communication line.

(3) Electrical wiring and electronic communications wiring must – depending on the type of operation – comply with the requirements for:

a) the safety of people, animals and property;

b) operational reliability in a given environment with a given mode of operation and the influence of the environment,

c) clarity of the wiring, enabling rapid localization and elimination of possible failures;

d) easy adaptability of the wiring during required relocation of electrical equipment and machinery,

e) power supply to devices that must remain functional during a fire;

f) avoiding mutual adverse impacts and interference for crossed and parallel power lines and electronic communications wiring,

g) the installation of equipment in the electrical wiring of structures with such electromagnetic compatibility and resistance so that this equipment operates satisfactorily in the electromagnetic environment without itself causing adverse electromagnetic interference with other equipment in that environment.

(4) Equipment that enables switching off the electricity supply must be permanently accessible and visibly permanently marked.

Section 64
Lightning protection

Lightning protection must be provided at structures and equipment wherever lightning could pose a threat to the life or health of people or damage to property.

Section 65
Protection from floods and torrential rain

[26] Decree No 85/1978, on inspections, revisions and tests of gas equipment, as amended by Government Regulation No 352/2000.

(1) In inundation areas, except their protected parts:

a) the construction of structures under the flood level must be designed in such a way that they withstand the effects of water during flooding and enable continuous flow around them;

b) structures must be resistant to ablation, floating and overturning;

c) the technical equipment of structures must be designed and implemented with increased resistance to the possible effects of water during flooding,

d) equipment must be proposed for the simple pumping of water from buildings if the construction technical design of the structures does not allow the drainage of water from the lowest storey under gravity.

(2) In inundation areas, except their protected parts, the following must be located at least 1 m above flood level:

a) the floor of habitable rooms,

b) the main electricity distribution board, boiler equipment for heating the buildings, and the alternative electricity supply source;

c) the technical room for electronic communications,

d) the machine room for elevators in buildings for housing and civil infrastructure,

e) the machine room for air conditioning equipment.

(3) In an inundation land area and elsewhere where necessary, the land area and structures must be protected from backflow of public sewerage during flooding or during torrential rain, and the sewerage connections or internal drains must be equipped with devices to prevent backflow or a shut-off valve.

CHAPTER VII
Energy saving and thermal protection

Section 66

(1) Buildings must be designed and implemented in such a way that the consumption of primary energy for their heating, ventilation, artificial lighting, hot water preparation, or cooling the building and regulating the humidity of the air is as low as possible.

(2) The requirements for the energy performance of buildings according to paragraph 1 are determined by a different legal regulation[27].

(3) For buildings with a required internal environment state, for the duration of their use the requirements for their thermal protection will ensure

a) the thermal comfort of users,

b) the required thermal technical characteristics of structures and buildings,

c) thermal and moisture conditions for technology according to the various purposes of the buildings,

d) high energy performance of buildings.

(4) The required thermal technical properties of structures and buildings must comply with the requirements according to the standards indicated in Section 84.

(5) Windows must comply with requirements for thermal technical properties at a steady-state temperature in accordance with the standard indicated in Section 84.

[27] Act No 406/2000, on energy management, as amended.

PART FOUR
SPECIAL REQUIREMENTS FOR SELECTED TYPES OF STRUCTURES

Section 67
School structures

The requirements for school structures are determined by other legal regulations[28].

Section 68
Medical structures

The requirements for medical structures are determined by other legal regulations[29].

Section 69
Structures for family recreation and allotments

(1) Structures for family recreation may have at most 80 m2 of gross floor area and 2 aboveground storeys with the height of the main cornice up to 6 m and total height up to 8 m.

(2) Only gardeners' shacks and a common building with sanitary facilities, potentially with a common saloon, may be located in allotments. Gardeners' shacks in allotments may not have a built-up area of over 25 m^2 including terraces, verandas and entrances. They may only have one aboveground storey with a ceiling height in the residence rooms of max. 2.5 m and may have a cellar if the level of the first aboveground storey is at most 1 m above the adjacent ground.

(3) The fencing of allotments must be transparent with a height up to 2 m.

Section 70
Structures for agriculture

A structure for agriculture means:

a) a structure for livestock, meaning a structure or set of structures for animals for breeding, fattening, work and other economic purposes, in particular stables and their related fixtures;

b) a supplementary structure for livestock, meaning a structure for drying and storing hay and straw, a structure for storing manure, dung, liquid manure and dung water, a structure for storing liquid waste, a structure for the preservation and storage of silage and silage juices;

c) a structure for the post-harvest treatment and storage of plant products,

d) a structure for storing mineral fertilisers,

e) a structure for storing plant protection products and devices,

f) a store room, structure, part of a structure or separate room intended for storing products and devices for plant protection with a maximum permissible weight of up to 1000 kg of products and devices for plant protection.

---

[28] For example Decree No 410/2005, on the hygiene requirements for premises and operation of equipment and establishments for the education of children and adolescents, as amended by Decree No 343/2009

[29] For example Act No 372/2011, on health services and the terms and conditions for the providing of such services (Act on Healthcare Services), as amended; Government Regulation No 361/2007, determining conditions of occupational health protection, as amended.

Section 71
Structures for livestock

(1) Structures for livestock must provide all the functions necessary in view of the technology of operation and must create an optimal environment for the animals.

(2) Stables must be designed in such a way to prevent the escape of harmful substances into underground or surface water. All the floors in stables and paved paddocks, including channels and tanks for draining and retaining harmful substances, must be impermeable. For stables in areas with a higher level of water protection and in specially protected areas and their protection zones, stables must be fitted with equipment enabling the regular measurement of the water tightness of the tanks and channels.

(3) The minimum standards for equipment and structures for livestock are determined by a different legal regulation[30].

Section 72
Supplementary structures for livestock

(1) A structure for drying and storing hay and straw must be designed according to the number and type of livestock and in accordance with the technology used for breeding the animals.

(2) The requirements for storing and the method for using fertilisers (solid mineral fertilisers, manure etc.) are determined by another legal regulation[31].

Section 73
Structures for the post-harvest treatment and storage of plant products

(1) Structures for the post-harvest treatment and storage of plant products are in particular halls and silos for grain, and halls for potatoes, fruits and vegetables. Plant product treatment plants are as a rule part of storage buildings.

(2) Structures for the post-harvest treatment and storage of plant products must ensure an appropriate environment for maintaining the quality of the stored product and must correspond to the used technology for the storage and handling of crops.

Section 74
Structures for storing mineral fertilisers

(1) Structures for storing mineral fertilisers must provide separate storage of the individual types of fertilizer according to the required capacity while respecting the physicochemical properties of the stored substances, and must enable the intake of fertilisers from railway wagons or road freight vehicles.

(2) Constructions, walls and roofs of structures for storing mineral fertilisers must correspond to the storage and handling technologies used and must comply in particular with the requirements for:

a) creating a space with the required climatic conditions according to the types of fertilizer stored,

b) resistance to the chemical effects of the fertilisers and corrosion,

c) prevention of the pyrolytic decomposition of the fertilizers.

[30] Decree No 208/2004, on minimum standards to protect livestock, as amended.

[31] Decree No 377/2013, on the storage and use of fertilizers, as amended by Decree No 131/2014.

(3) Storage and handling areas of a silo - with the exception of entry and exit ramps - must be provided with curbs or gutters in such a way that storm water cannot penetrate into them or liquids leak from them into areas without water management.

(4) The requirements for structures for storing ammonium nitrate, compound fertilizers containing ammonium nitrate and compound fertilizers containing nitrogen partly or wholly in the form of ammonium nitrate are determined in a manner corresponding to the requirements according to the standards indicated in Section 84.

Section 75
Structures for storing products and devices for plant protection

(1) Structures for storing products and devices for plant protection must be designed in such a way to prevent the leakage of harmful substances into the surrounding terrain and ground and then into the underground or surface water. All surfaces and structures for storing products and devices for plant protection, including channels and tanks for draining and retaining harmful substances, must be designed as impermeable. Floors must be sloped towards an emergency sump, while an emergency sump means a sink, catch basin or tank intended to retain harmful substances leaked or released during emergency conditions from tanks, containers, packaging, and potentially technological equipment with a volume at least corresponding to the capacity of the largest tank located in it or draining into it.

(2) Structures for storing products and devices for plant protection must be broken down into:

a) a section for receiving to and releasing from storage products and devices for plant protection with a roofed handling area with a ramp and an emergency retention area,

b) a section for storing products and devices for plant protection for the separate storage of individual types, and empty contaminated packaging for takeback[32]; this section must be independently ventilated with the possibility of air temperature control and monitoring;

c) a separately ventilatable section for auxiliary and hygiene operations with the possibility of temperature control.

(3) The sewerage system must be designed as separate for rainwater, sewage and wastewater-contaminated products.

(4) Structures for storing products and devices for plant protection must be provided with an emergency sump, which must have a surface resistant to the chemical effects of the stored products and must be protected from the inflow of rainwater from surrounding areas and from the penetration of underground water. It must be dimensioned for at least 10% of the total volume of stored liquids, however at least for the total volume of one of the largest stored transport containers or receptacles.

Section 76
Store rooms

(1) A store room must be separately ventilatable with air temperature control and monitoring; the technical and layout design of this store room must enable the clear and separated storage of products and devices for plant protection according to type of hazard, and must enable the separate storage of contaminated packaging[32], personal protective equipment and clothing.

(2) The floor of a store room must be impermeable, resistant to the chemical effects of the stored products and devices for plant protection, and must be provided along the perimeter walls with an elevated plinth.

[32] Act No 477/2001, on packaging and on amendments to some Acts (Act on Packaging), as amended.

Structures and equipment for advertising and information

Section 77
General requirements

(1) Structures for advertising, and advertising and information devices are located in such a way that they do not disrupt the architectural, urban, landscape or reverential character of the environment, do not pose a threat to the safety of operation on roads and railways, do not inappropriately burden their surroundings with noise or light, and do not interfere in the crown and root zones of trees.

(2) Structures for advertising, and advertising and information devices with a panel area of over 4 m^2 may be located in historical reservations and historical zones[1] only if intended to convey information that does not have an advertising nature[33]. This restriction does not apply for structures and equipment located on temporary enclosed building lots.

(3) Structures for advertising, or advertising or information devices that together form a single unit or may be perceived as a single unit, are considered for the purposes of Section 77 to 82 as a single structure for advertising, or a single advertising or information device.

(4) The area of a panel for the purposes of Section 77 to 82 means the area of a panel or other area or multiple areas serving to display advertising or information; panels with more than one side are only counted once.

Section 78
Separately standing structures for advertising, and advertising and information devices

(1) Separately standing structures for advertising and separately standing advertising and information devices with a panel area of over 4 m^2 may only be located in historical reservations and historical zones[1] if intended to convey information that is not of an advertising nature[33], or if they mark specific business premises or institution buildings; these must be located on the plot of land of the structure that they mark, or in its immediate vicinity.

(2) If a land use or zoning plan does not determine otherwise in accordance with Section 83(2), the spacing between individual separately standing structures for advertising or separately standing advertising and information devices with a panel area of over 4 m^2 must be in metres equal at least to triple the area of the panel of the larger of these structures or devices in square metres, however not less than 100 m, always along one side of a road. This provision does not apply for structures and equipment if intended to convey information that is not of an advertising nature[33], or if it marks specific business premises or the building of an institution; these must be located on the plot of land of the structure that they mark, or in its immediate vicinity.

(3) In parks, forests[34], natural parks, specially protected areas and their protection zones[35], alleys of trees, on bridges over watercourses and on pedestrian paths it is not possible to locate separately standing structures for advertising, and advertising and information devices, except equipment with a panel area of under 4 m^2 intended to convey information that is not of an advertising nature[33], or devices that mark specific business premises or the building of an institution; these must be located on the plot of land of the structure that they mark, or in its immediate vicinity. It is not possible to locate separately standing structures for advertising, and advertising and information devices in water bodies and watercourses and areas for planting trees.

[33] Section 1(2) of Act No 40/1995, on the regulation of advertising and on amendments and supplements to some other Acts, as amended.

[34] Section 2(a) of Act No 289/1995, on forests, as amended.

[35] Section 14 and Section 37 of Act No 114/1992, on nature and landscape protection, as amended.

(4) Separately standing structures for advertising, and advertising and information devices are located in an open public space in accordance with Section 16(3) in such a way that they do not inappropriately restrict pedestrian movement and so that a passage with a net width of at least 1.5 m is retained.

(5) Separately standing structures for advertising, and advertising and information devices in a flow inundation land area must allow the passage of flood flows, including objects and silts carried by the flood.

Section 79

Structures for advertising, and advertising and information devices located above roof level

If the land use or zoning plan does not determine otherwise in accordance with Section 83(2), structures for advertising, and advertising and information devices located above roof level:

a) must be composed only of letters, numbers and logos, unless they are structures or devices intended to convey information that is not of an advertising nature[33],

b) must not be higher than 2 m and - on pitched roofs with an angle greater than 30° - must not go beyond the main roof ridge,

c) may be used exclusively to mark specific business premises or the building of an institution, unless they are structures or devices intended to convey information that is not of an advertising nature[33].

Section 80

Structures for advertising, and advertising and information devices positioned perpendicular to the façade

(1) If the land use or zoning plan does not determine otherwise in accordance with Section 83(2), advertising and information devices positioned perpendicular to the façade may not extend more than 0.8 m in front of the façade and the area of the panel may not exceed 6.5 m^2.

(2) If the land use or zoning plan does not determine otherwise in accordance with Section 83(2), it is not possible to locate structures for advertising positioned perpendicular to the facade.

Section 81

Structures for advertising, and advertising and information devices located on the façade and hanging in front of the façade

(1) If a land use or zoning plan does not determine otherwise in accordance with Section 83(2), structures for advertising, and advertising and information devices located on the façade and hanging in front of the façade:

a) must be outside the parterre of structures with shop signs composed only of letters, numbers and logos;

b) must not be higher than 2 m if they have a prevailing horizontal dimension, and wider than 1.5 m if they have a prevailing vertical dimension.

(2) Paragraph 1 does not apply for structures for advertising, and advertising and information devices, if they form part of the architectural design of the structure, if they are located on blind gable walls and blind façades or if they are intended to convey information that is not of an advertising nature[33].

(3) Structures for advertising, and advertising and information devices located on blind gable walls and blind façades may not extend beyond their outline.

Section 82

Structures for advertising, and advertising and information devices on fencing, retaining walls and guardrails

(1) Advertising and information devices located on fencing - with the exception of the temporary fencing of a building lot - may not have a panel area of over 4 m^2 and may be used exclusively to mark specific business premises or the building of an institution.

(2) Advertising and information devices located on retaining walls may not have a panel area of over 6 m^2.

(3) Structures for advertising may not be located on fencing and retaining walls with the exception of temporary fencing of building lots.

(4) Structures for advertising located on the temporary fencing of building lots, and advertising and information devices located on fencing and retaining walls, may not extend beyond their height by more than 0.3 m.

(5) Structures for advertising, and advertising and information devices may not be located on a guardrail in an open public space.

PART FIVE
COMMON, TRANSITIONAL AND FINAL PROVISIONS

Section 83
Exemptions from land use and building requirements

(1) Under the conditions determined in Section 169 of the Building Act and in accordance with this Regulation it is possible to permit an exemption from Section 17(6) and (7), Section 18(2), Section 24(1), Section 28(1), Section 29(2) to (4), Section 32(1), Section 44(1) to (4) and Section 45(3) and (6).

(2) Under the conditions determined in Section 169 of the Building Act and in accordance with this Regulation it is possible to permit a differing solution to the land use or zoning plan for Section 14(1), Section 16(5), Section 22(4), Section 24(1), Section 25(1) and (2), Section 27(2) to (4), Section 29(2), Section 32(2), Section 33(8), Section 78(2), Section 79, Section 80(1) and (2), and Section 81(1).

Section 84

Selected requirements indicated in Section 19(1), Section 40(1), Section 41(1), Section 45(2), (3), (4) and (8), Section 46(1) and (3), Section 47(6), Section 52(3), Section 59(1) and (2), Section 66(4) and Section 74(4) are considered complied with if the procedure adopted is in accordance with the specified standard or its part notified in the Gazette of the Czech Office for Standards, Metrology and Testing, which contains more detailed technical requirements. More detailed technical requirements are contained in standards applying to:

a) the spatial arrangement of technical equipment networks (minimum horizontal distance if networks are running in parallel, minimum vertical distance when networks cross, and the minimum coverage of networks),

b) mechanical resistance and stability (structural design, structural loading),

c) the foundations of structures (structural design, structural loading),

d) insolation,

e) daylighting (the level of daylighting, the glazed plane daylight factor),

f) artificial lighting,

g) gas tightness of free-standing chimneys,

h) impact and airborne sound insulation of walls, partitions and ceilings,

i) slip-resistance of floors,

j) slip-resistance of stairways, landings and ramps,

k) thermal protection of buildings,

l) storage of solid industrial fertilizer;

these requirements may also be complied with through a different technical solution if it is shown that the proposed solution guarantees at least the basic requirements for structures indicated in Section 39. Unless it is shown otherwise in the proceedings in question, it is understood that the basic requirements for structures indicated in Section 39 are complied with in the case of products produced and/or placed on the market in a European Union Member State or in Turkey, or which originate in any of the countries of the European Free Trade Association that are currently a contracting party to the European Economic Area, if these products comply with technical regulations, standards and codes of good practice mandatory for production or placement on the market, or for the use of such product in any of these states.

Section 85
Transitory provisions

(1) Documentation and project documentation[36] prepared before 30 September 2014 according to Decree No 26/1999 of Prague Capital City, on general technical requirements for construction in Prague Capital City, as amended, and submitted to the building office by 30 September 2016, are assessed according to Decree No 26/1999 of Prague Capital City, on general technical requirements for construction in Prague Capital City, as amended.

(2) Documentation and project documentation[36] prepared between 1 October 2014 and 15 January 2015 according to regulation No 11/2014 of Prague Capital City, determining the general requirements for the use of land area and technical requirements for structures in Prague Capital City, and submitted to the building office by 15 January 2017, are assessed according to regulation No 11/2014 of Prague Capital City, determining the general requirements for the use of land area and technical requirements for structures in Prague Capital City.

(3) Documentation and project documentation[36] prepared between 16 January 2015 and the date this Regulation came into effect according to Decree No 501/2006, on general requirements for the use of land area, as amended, and Decree No 268/2009, on technical requirements for structures, as amended by Decree No 20/2012, and submitted to the building office within one year from this Regulation coming into effect, are assessed according to Decree No 501/2006, on general requirements for the use of land area, as amended, and Decree No 268/2009, on technical requirements for structures, as amended by Decree No 20/2012.

(4) In other cases the procedure will be according to this Regulation.

(5) When changing the binding part of existing planning documentation, the procedure adopted will be according to existing legal regulations taking into account the objectives and the tasks of land use planning and this Regulation.

Section 86
Repealing provisions

Regulation No 11/2014 of Prague Capital City, determining the general requirements for the use of land area and technical requirements for structures in Prague Capital City (Prague building regulations), is repealed.

Section 87
Effect

This Regulation will come into effect on the first day of the third month following its promulgation.

[36] Decree No 499/2006, on the documentation of structures, as amended by Decree No 62/2013

Annex No 1 to Regulation No …/… of Prague Capital City

Specific values

1. Trees and utility lines

Re Section 16(5); Section 19(3) and (5)

Planting area
A minimum planting area must be provided for a tree. A planting area must be located away from a compacted layer and materials unsuitable for roots, and as a rule will remain open or covered with bars. Its minimum width is 0.8 m and minimum size is 9 m^2 for large trees (over 20 m), 4 m^2 for medium-sized trees (10 to 20 m) and 2 m^2 for small trees (up to 10 m).

Area for absorbing rainwater
A sufficient area for the absorption of rainwater and aeration must be provided for a tree. The minimum size of this area is as a rule for large trees 10 m^2 and for medium-sized and small trees 6 m^2. The area for absorption of rainwater is designed either as open soil or dry-laid tiles with wide gaps between them, potentially a different covering that lets water and air through (e.g. sand, gravel). This requirement may alternatively be complied with through the use of adequate technical and technical vegetation elements ensuring sufficient water and aeration.

Root space
Root space includes the volume of soil in which a tree may lay down roots. Root space must ensure the mechanical stability of the tree and enable rooting to a sufficient extent, while its size is as a rule 1/10 of the projected volume of the crown.

Minimum distance of underground networks from the base of a tree trunk

Water mains	1.5 m 1.0 m for renewal and with the use of technical measures
Sewerage	3.0 m without restriction 1.5–3.0 m if the sewer is laid to a depth of up to 5 m and with the use of technical measures 1.0 m for connections with the use of technical measures
Gas	2.5 m 1.5 m with the use of technical measures
1 kV	1.0 m 0.5 m with the use of technical measures
22 kV	1.5 m 1.0 m with the use of technical measures
110 kV	3.0 m
Caliduct	2.5 m

Public lighting (cables)	1.0 m 0.5 m with the use of technical measures the base of the pole must be outside the planting area
Electronic communications	1.0 m 0.5 m with the use of technical measures
Collector	3.0 m for collectors with overlying stratum of less than 5 m 1.5 m for collectors with overlying stratum of less than 5 m and with the use of technical measures

The distances apply to both main routes and individual connections.

In cases where a network is laid before a planned tree, or when a tree is planted near an existing network, technical measures are considered to mean

a) the laying of the network into protectors,
b) the placement of anti-root barriers in the root space section and the route of the network.

In cases when a network is laid near an existing tree, technical measures are considered to mean

a) passing through a protector (horizontal drilling),
b) manual excavation or excavation using suction equipment; treatment of the roots, filling of the root space with a special substrate for trees.

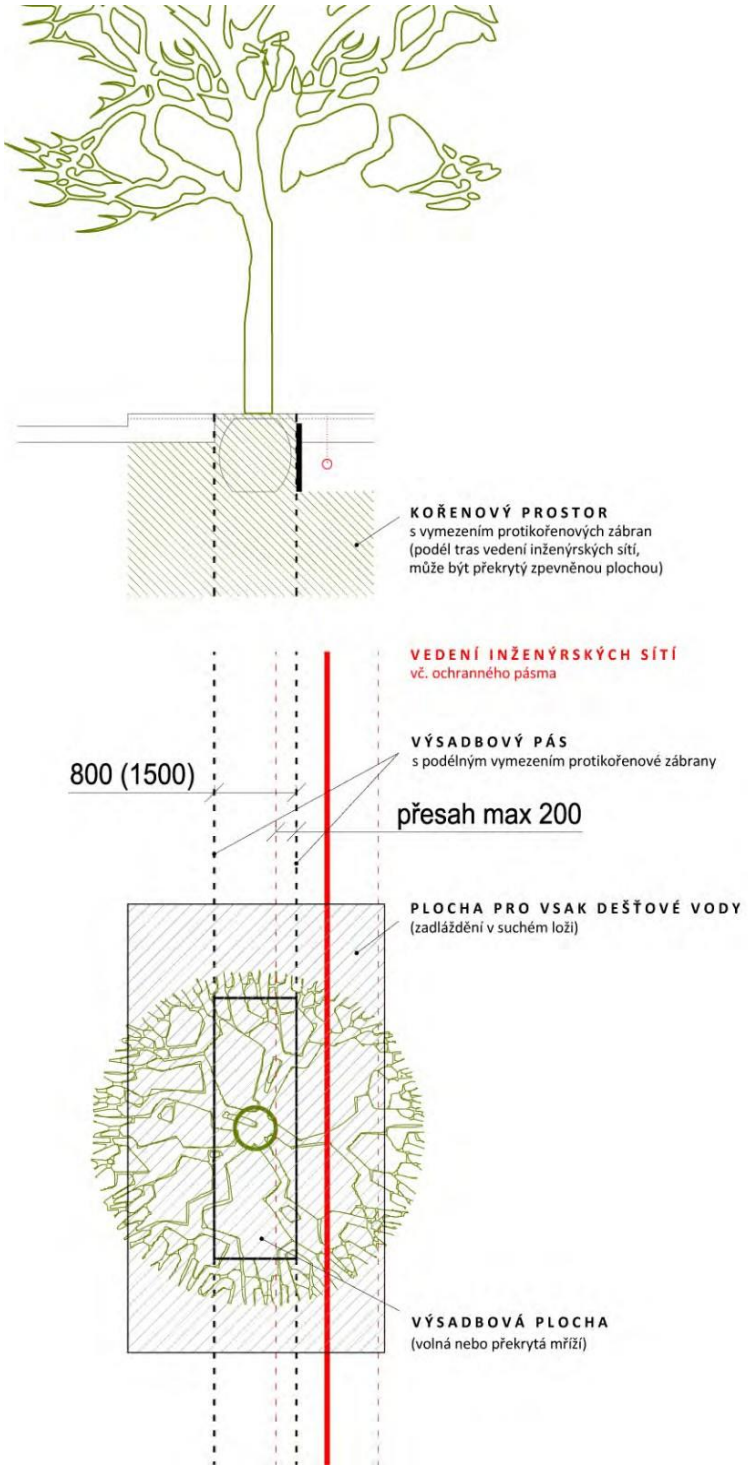

Image 1: Trees and utility lines: planting strip, planting area, root space and area for absorption of rainwater

[image:]
ROOT SPACE
with definition of anti-root barriers (along the route of the utility lines, may be covered)
UTILITY LINES ROUTE
Including protective zone
PLANTING ZONE
with longitudinal definition of anti-root barriers
max. overlap 200
RAINWATER ABSORPTION AREA
(dry-laid tiles)
PLANTING AREA
(open or covered with bars)

2. Clearance angle
Re Section 28(1)

Clearance angle is complied with if no obstacle protrudes into the open space defined over a vertical angle of 45° and in a plane arc (horizontal angle) at least 45°, calculated from a control point in the window under consideration. The horizontal angle is calculated at least 25° from the facade and cannot be composed of parts. A building or its part, a supporting or other wall or the surrounding terrain are considered as obstacles.

To assess the clearance angle, a control point in the middle of the window at the level of the façade at the height of the sill or at a height of 1 m above floor level of the room in question is used. If there is more than one window in the room in question, the one assessed is the one that, according to the dimensions, is critical for contact with the environment.

Compliance with the clearance angle may be demonstrated using a clearance angle diagram (image 3). The diagram is used in the following way (according to the example in image 2):

a) The situation is plotted onto a transparency and in the appropriate scale is placed on the diagram indicated in image 3 in a manner so that in the assessed situation the control point of the room in question aligns with the point marked as “window” and the plane of the façade in the immediate vicinity of the window aligns with the line marked “plane of the façade”. The diagram is independent of its orientation to the cardinal points.

b) A segment of a circle is placed onto the diagram with its centre on the point marked “window” and a radius corresponding to the difference in the height of the point of the assessed window and the height of a potential obstacle.

c) The Clearance angle is determined between the start of the segment (the thick line defining the hatched area of the ignored 25° angle from the façade) and the intersection of the segment with the obstacle, potentially between two intersections. If any part of the obstacle closer to the window in question protrudes into the clearance angle, this must be reduced by the appropriate angle (see the illustration).

d) The Clearance angle is complied with if the horizontal angle is at least 45°. Segments cannot be combined.

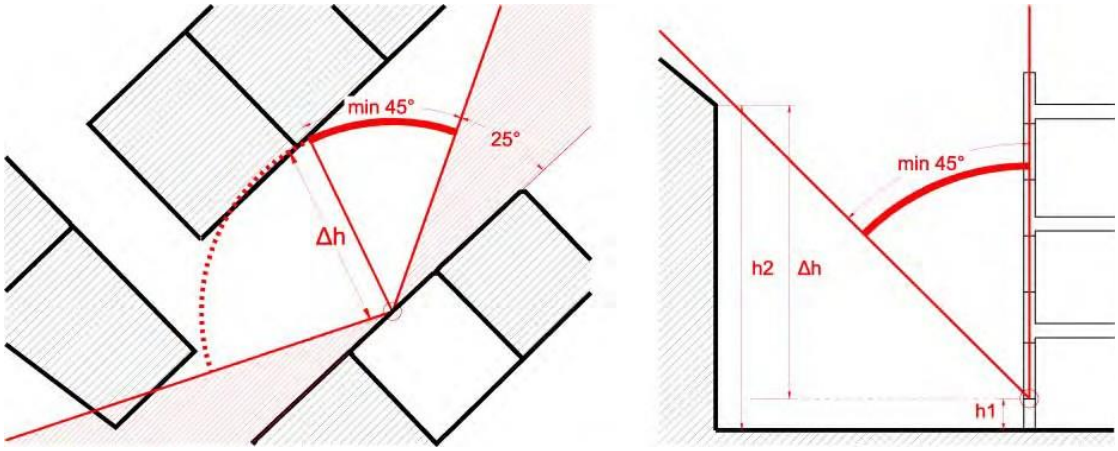

Image 2: Example demonstrating the clearance angle on the situation of structures

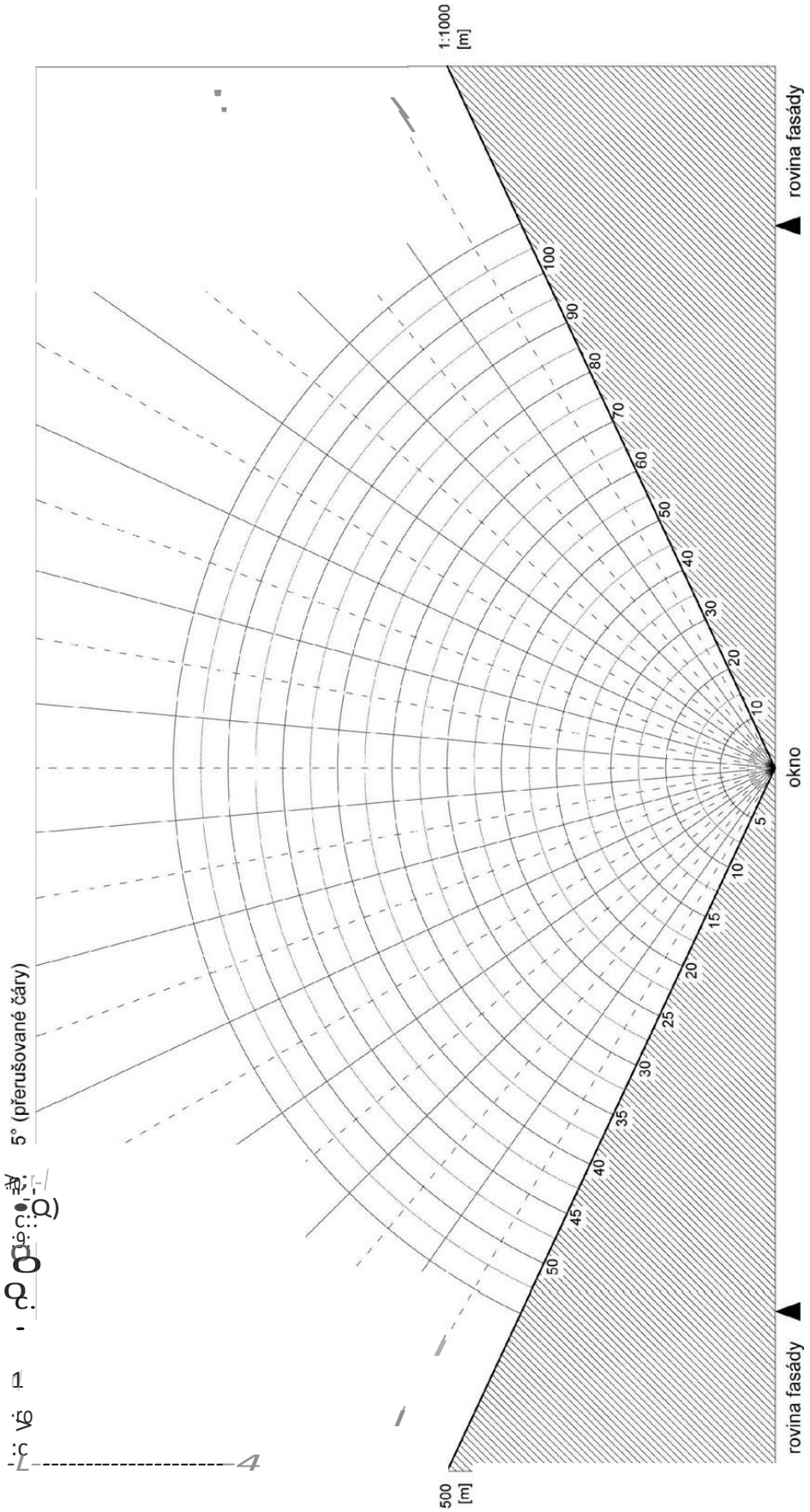

Image 3: Diagram of the clearance angle

[image:]

5° (dashed line)

Window

Façade plane

3. The shortest distance between a well for individual drinking water supply and possible pollution sources

Re Section 36(5)

Table 1: The shortest distance between a well for individual drinking water supply and possible pollution sources

Possible pollution source	Less permeable environment	Permeable environment
Cesspits, small treatment plants, sewerage connections	5 m	12 m
Tanks of liquid fuels for individual heating placed in a habitable building or separate auxiliary building	7 m	20 m
Cow barns, slurry pits and dung heaps with small-scale stabling of individual pieces of livestock	10 m	25 m
Individual washing surfaces of motor vehicles and their drainage pipes and gutters	15 m	40 m

4. Ventilation

Re Section 46(1) and (3)

Table 2

Requirement	Permanent ventilation (flow of outdoor air)	Intermittent ventilation (flow of exhaust air)		
	Quantity of outdoor air per person (m^3/h per person)	Kitchens (m^3/h)	Bathrooms (m^3/h)	WC (m^3/h)
Minimum value	15	100	50	25

5. Sanitary facilities

Re Section 50(6)

Table 3: The requirements for the number of sanitary facilities in buildings with an assembly space

Structures with an assembly space	Toilet	Urinal
For every 30 women	1	
For every 100 men	1	2
For every additional 50 men		1

6. Stairways

Re Section 56(2)

Lowest stairway headroom and unobstructed height of a stairway

The stairway headroom of a stairway flight is the vertical distance between the connecting line of the edges of the individual steps to the line of travel and a straight line leading from the lower edge of the structure over the line of travel. The stairway headroom of a stairway and inclined ramp must be at least 2.1 m.

The unobstructed height of a stairway flight is the perpendicular distance between the connecting line of the edges of the individual steps to the line of travel and a straight line leading from the lower edge of the structure over the line of travel. The unobstructed height of stairways and inclined ramps must be at least 1.95 m.

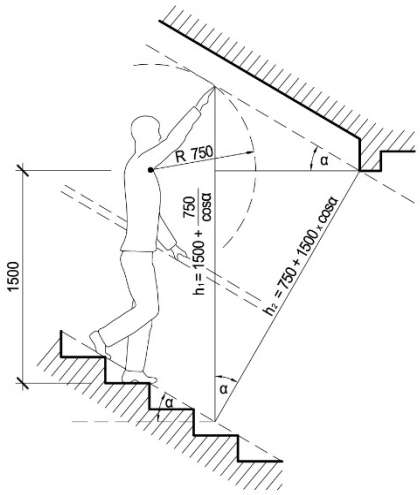

Image 4: Smallest permissible stairway headroom (h1) and unobstructed height (h2)

Requirements for individual steps and treads

All individual steps on the line of travel in a single stairway flight must have the same height and width and must be horizontal, without inclination in the transverse or longitudinal direction.

The width of a stairway step on the line of travel must be at least 0.21 m. In apartments, in individual housing structures and in structures for family recreation the width of a stairway step may be reduced to 0.18 m in justified cases.

The width of a stairway treads on the line of travel must be at least 0.25 m. In apartments, in individual housing structures and in structures for family recreation the width of a width stairway treads may be reduced to 0.225 m in justified cases.

The mutual relationship between the width and height stairway step

The width and height of a stairway step must be in such a ratio that the sum of two heights and one width is at least 0.61 m and at most 0.65 m.

Angle of stairway flights

The angle of stairway flights in buildings with maximum of 3 apartments and in buildings with an elevator with more than 3 apartments must be at most 35°. If the construction height of a storey in individual housing structures and in structures for family recreation does not exceed 3 m, the angle of stairway flights may be increased up to 41°.

This is without prejudice to the provisions of other legal regulations[37].

Highest number of stairway steps in a single stairway flight

In structures with a maximum of 3 apartments there may be at most 18 steps in a single stairway flight. This is without prejudice to the provisions of other legal regulations[37].

Smallest unobstructed width of stairway flights

The unobstructed width of a stairway flight is designed according to purpose and operation. The unobstructed width of a stairway flight or ramp must be at least 0.9 m[38]. In apartments, in individual housing structures and in structures for family recreation this may be reduced to 0.75 m.

A guardrail or bannister may intrude a maximum of 0.1 m into the unobstructed width.

General technical requirements for the landings of stairways and the landings of inclined ramps
The unobstructed width of landings must be equal to at least the unobstructed width of the connected stairway flights and may not be narrowed by any intruding structure or equipment. Landings must be horizontal, without inclination in the transverse or longitudinal direction.

Doors on the landings of emergency stairways and inclined ramps must be located in such a way that the door itself does not narrow the minimum unobstructed width of the landing in any position.

[37] Decree No 398/2009, on general technical requirements for the barrier-free use of structures.

[38] Decree No 23/2008, on the technical conditions for the fire protection of structures, as amended, and Decree No 398/2009, on general technical requirements for the barrier-free use of structures.

Doors on the landings of other stairways that open towards the landings in parallel to the axis of the stairway flight must have a distance between the fully opened door and the nearest edge of a step of at least 0.3 m.

Doors on the landings of other stairways that open outside the area of the landing must have a distance between the closed door and the nearest edge of a step of at least 0.6 m.

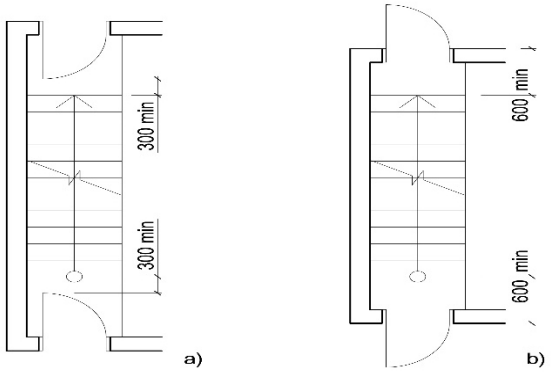

Image 5: Location of doors on the landings of other stairways not used for escape (dimensions in mm)

7. Guardrail

Re Section 58(1)

Table 4: Dimensions of the open space

Walking area		Limit dimension (m)	
		depth	width
With limited access	with normal traffic	0.8	0.2
	with reduced traffic	1.5	0.3
With free access		0.5	0.15
In premises for children		0.3	0.1
Auditorium with operating blackout	with free access to adults	0.3	0.15
	in premises for children	0.2	0.1

Table (5): Smallest permissible height of a guardrail

Smallest permissible height of a guardrail		Use
Reduced	0.9	The depth of the open space is ≤ 3 m
Basic	1.0	In all other cases

Increased	1.1	The depth of the open space is over 12 m The walking area within a distance of up to 1 m from the open edge slopes towards this edge at an angle of over 10% or stepwise In the open space there is a threat to health from harmful substances or a temperature of over 50 centigrade
Special	1.2	The depth of the open space is over 30 m
	1.3	For bicycle operation along the edges of travelling surfaces with a depth of open space over 0.5 m

For stairways or inclined ramps with a mirror, the height of the guardrail is determined:

a) according to the depth of the open space in the mirror, if the mirror is wider than 0.2 m, or
b) according to the height difference to the nearest lower storey (stairway flight, landing etc.) behind the mirror, if the mirror is not wider than 0.2 m.

The width of the mirror for this purpose is measured between the most projecting contiguous elements that bound the mirror, e.g. hand rails, stringer etc.

If the construction of a guardrail or adjacent structures create - on the side of the walking area at a height of up to 0.5 m above the walking area - an approximately horizontal platform of width between 0.13 m and 0.3 m (enabling standing), the overall height of the guardrail must protrude beyond the level of this area by least 0.9 m. An area wider than 0.3 m is considered to be a walking area and the height of the guardrail is determined according to above table.

The height of the guardrail may be partially substituted for walking areas with restricted access or with free access for adults by an increased width of the guardrail (b_z) at the level of its upper edge (see image 6).

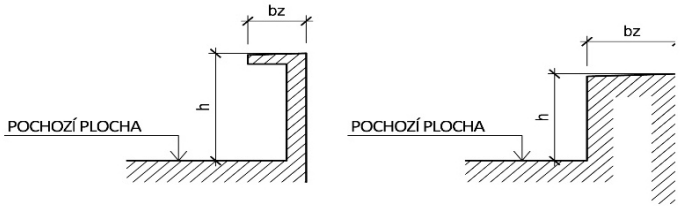

Image 6: Examples of increased guardrail width
[image]
WALKING AREA

The limit height and width of a guardrail in these cases is determined by the diagram in image 7. The upper surface of the guardrail should not slope in the direction towards the open space.

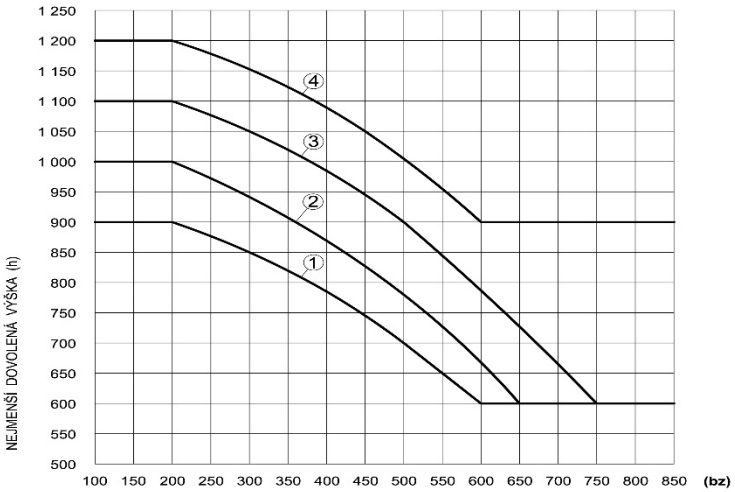

The smallest permissible height of a guardrail (mm): 1 – reduced, 2 – basic, 3 – increased, 4 – special

Image 7: Diagram of guardrail height and width
[image]
SMALLEST PERMISSIBLE HEIGHT

Bannister filler

Walking areas with restricted access may be provided with a guardrail with a filler:

a) the same as with free access for people (point 2) or
b) twin bar with a bottom rail, if the lower bar is parallel to the upper edge of the bottom rail and is positioned 0.35 m to 0.5 m above that edge, or
c) with multiple bars or otherwise, if:
   - with a bottom rail in internal areas with a damp or wet environment and with a gap between

the upper edge of the bottom rail and the lower edge of the filling of at most 0.35 m;

- in other spaces without a bottom rail and with a gap between the filling and the walking area of at most 0.25 m.

In walking areas with free access, the gaps in the bannister filler must comply with the following requirements

- vertical and inclined at an angle of up to 45° from the vertical (between columns, panels etc.), may not be wider than 0.12 m;
- horizontal and inclined at an angle of over 45° from the vertical (including the gap between the bottom rail and the filling), may not be wider than 0.18 m;
- for a guardrail without bottom rail the gap between the walking area and the filling must not be wider than 0.12 m;
- the floor plan projection of the gap between an overhanging guardrail and the edge of the walking area must not be wider than 0.05 m;
- the other gaps or openings must be arranged in such a way that a testing beam in any position perpendicular to the surface of the filling will not pass through them – see image 8.

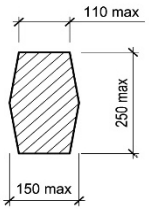

Image 8: Testing beam for areas with free access (dimensions in mm)

For walking areas with free access with normal traffic it is possible to use a guardrail with a twin bar filling and without bottom rail if

- the lower bar is positioned at a level of 0.45 to 0.6 m above the surface of the walking area;
- the guardrail is at least 1.5 m away from the edge of the open space;
- the area between the guardrail and the open edge is non-accessible and is at the same level as the walking area or at most 0.5 m lower;
- both the walking and the non-accessible areas are inclined towards the open edge by at most 3%;
- the non-accessible area is clearly differentiated from the walking area (planted vegetation, gravel layer etc.).

For walking areas in premises intended for children the gaps in the bannister filler must comply with the following requirements

- vertical and inclined at an angle of up to 45° from the vertical, may not be wider than 0.08 m;
- up to a height of 0.6 m above the surface walking area, the bannister filler may only be solid or made from vertical bars or panel elements;
- horizontal and inclined at an angle of over 45° from the vertical position, located over 0.6 m above the surface of the walking area, may not be wider than 0.12 m;
- the vertical distance between the walking area or the bottom rail and the bannister filling may not be larger than 0.08 m;
- the floor plan projection of the gap between an overhanging guardrail and the edge of the walking area must not be wider than 0.03 m;
- the other gaps or openings must be arranged in such a way that that a testing beam in any position perpendicular to the surface of the filling will not pass through them – see image 9; for stairways, the gap between each stairway step and the lower bar of the guardrail must be split into at least two parts or the edge of the step fitted with a bottom rail.

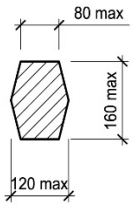

Image 9: Testing beam in premises for children
(dimensions in mm)

For walking areas in buildings with more than 3 apartments and buildings with accommodation units, the guardrail up to a height of 0.6 m above the walking area must be solid or with a filling of vertical bars or panel elements.

The largest permissible size of gaps according to point 2 and 4 also applies for gaps between a guardrail and structures or technological equipment to which the guardrail connects.

At the open edge of a walking area in auditoriums with places for seating (balconies, galleries etc.) with free access for adults it is possible to modify the bannister filling for reasons of visibility according to paragraph 3 only to a height of

- 0.6 m when the required height of the guardrail is reduced or basic;
- 0.7 m when the required height of the guardrail is increased.

If there is no communication space on the walking area in front of the guardrail, but only a row of seats, the guardrail above the indicated level may be composed of a single horizontal bar. If there is a communication space in front of the guardrail, there must be no horizontal gaps wider than 0.18 m above the level of the filling according to paragraph 3.

At the open edges of the walking areas of auditoriums with free access for adults, where a guardrail is required, a double bar filling is possible

- without bottom rail if, at the open edge of the walking area, there are only places for seating and the depth of the open space under it is not greater than 0.8 m, or
- with a bottom rail if, at the open edge of the walking area, there are only places for seating and the depth of the open space under it is not greater than 2 m, or if at the open edge of the walking area there are places for standing and seating and the depth of the open space under it is not greater than 1.5 m.

Re Section 58(2)(b)

A guardrail need not be fitted if the open space is covered with a structure that corresponds to the foot traffic loading and in which there are no openings through which a sphere of the following diameter would pass:

a) 0.08 m in a walking area with restricted access,
b) 0.06 m in a walking area with free access for adults,
c) 0.03 m in a walking area in premises for children.

Re Section 58(2)(c)

A non-accessible safety zone must be clearly marked

a) by a structure at least 0.3 m high;
b) by a water surface with a bottom at least 0.15 m under the level of the edge of the walking area;
c) by continuous and permanent greenery at least 0.5 m high or
d) in another way that ensures the inaccessibility of the safety zone more effectively than a mere “no entry” sign.

Annex No 2 to regulation No …/… of Prague Capital City

Basic numbers of parking spaces

The table determines the basic number of parking spaces for individual purposes of use, including the ratio of tied and visitor parking spaces for calculation according to Section 32.

An indicator of the basic number of parking spaces has been determined for the individual purposes of use, and is defined by the gross floor space for the purpose of use (in m^2) per parking space. The ratio of tied and visitor parking spaces is determined as a percentage.

The appropriate value is always used for selected purposes of use with specific requirements (indicated in the table under the individual categories of purpose of use). For specific purposes of use according to point 12 the basic number of parking spaces is determined individually according to the anticipated number of visitors and employees.

The gross floor area for the purpose of use means the sum of the gross floor areas (Section 2(2)(g)) of all parts of a building or set of buildings for the selected purpose of use; garages, cellars, technical and auxiliary spaces and technical infrastructure buildings are not included.

č. USE	PURPOSE OF	INDICATOR OF BASIC NUMBER OF PARKING SPACES [GFA m^2 / 1 parking space]	tied [%]	visitor [%]
1	Housing	85*	90	10
2a	Individual stores in the parterre	70	10	90
2b	Services and small business premises (catering, restaurants, pubs, craft workshops, garages, showrooms, e-shop dispensaries etc.)	40	10	90
	selected purposes of use with specific requirements: car servicing	20	10	90
2c	Large format stores and services (supermarkets, department stores, shopping centres, hypermarkets etc.)	40	10	90
3a	Administration with little traffic (routine administrative operations, company headquarters, design studios etc.)	50	90	10
3b	Administration with high traffic	45	60	40

	(public and other institutions, offices, banks, insurance companies, post offices etc., in particular over-the-counter services)			
4a	Long-term accommodation	120	80	20
	(dormitory for employees etc.)			
4b	Accommodation for students	250	90	10
	(university dormitory etc.)			
4c	Short-term accommodation	100	90	10
	(hotels, bed and breakfast establishments etc.)			
	selected purposes of use with specific requirements:			
	motel	25	90	10
	hostel	180	90	10
4d	Institutional and social care	350	35	65
	(homes for the elderly, nursing homes, youth shelters, asylum shelters etc.)			

5a Education	250	30	70
(basic school, high school, college etc.)			
selected purposes of use with specific requirements:			
nursery, kindergarten	300	80	20
university	100	30	70
5b Education / Conventions	60	10	90
(training equipment, lecture centre, convention centre etc.)			
6 Operations will assembly areas	60	20	80
(cinema, theatre, concert, party and dance halls etc.)			
selected purposes of use with specific requirements:			
church, chapel	200	5	95
ceremonial hall, crematorium	120	10	90
7 Cultural institutions	120	20	80
(galleries, museums, libraries etc.)			
8a Outpatient healthcare equipment	50	30	70
(clinic, medical clinic etc.)			
8b Inpatient healthcare equipment	300	50	50
(hospital, clinic etc.)			
9a Sports centres — operations with interior sports areas (without spectators)	100	20	80
(sports hall, gymnasium, squash etc.)			
9b Sports centres — operations without interior sports areas and swimming pools (without spectators)	40	10	90
(wellness, fitness, bowling, swimming pool, aquapark etc.)			
9c Outdoor sports areas (without spectators)**	120	10	90
(tennis courts, volleyball courts, mini football pitch etc.)			
selected purposes of use with specific requirements:			
football pitch	400	10	90
10 Production	200—800	10	90
11 Storage	200	30	70
12 Specific purposes of use	—	—	—
stadium, sports and multipurpose hall, concert hall etc. — — — zoo, botanical garden — — — fairground, amusement park, leisure complex etc. — — —			

* but no more than two parking spaces per unit

** outdoor area with playgrounds and sports fields included

= 1 1 $	3 3 7 navstevn cka stanf bydlenf; vazana a navstevn cka stanf ostatnfch ucelu u:Zfvanf	3 3 7 vazana stanf bydlenf
	min. max.	min.
00	0% — 15%	50%
01	10% — 35%	70%
02	15% — 55%	80%
03	30% — 75%	90%
04	50% — 90%	90%
05	65%	100%
06	80% — 110%	100%
07	90%	120%
08	100%	140%

o $ 3 $ = 1 1 o c 6 7 $ 1:50 000
pro ucely stanovenf poctu parkovacfch stanf
(k ustanovenf Section 32 odst. 2)

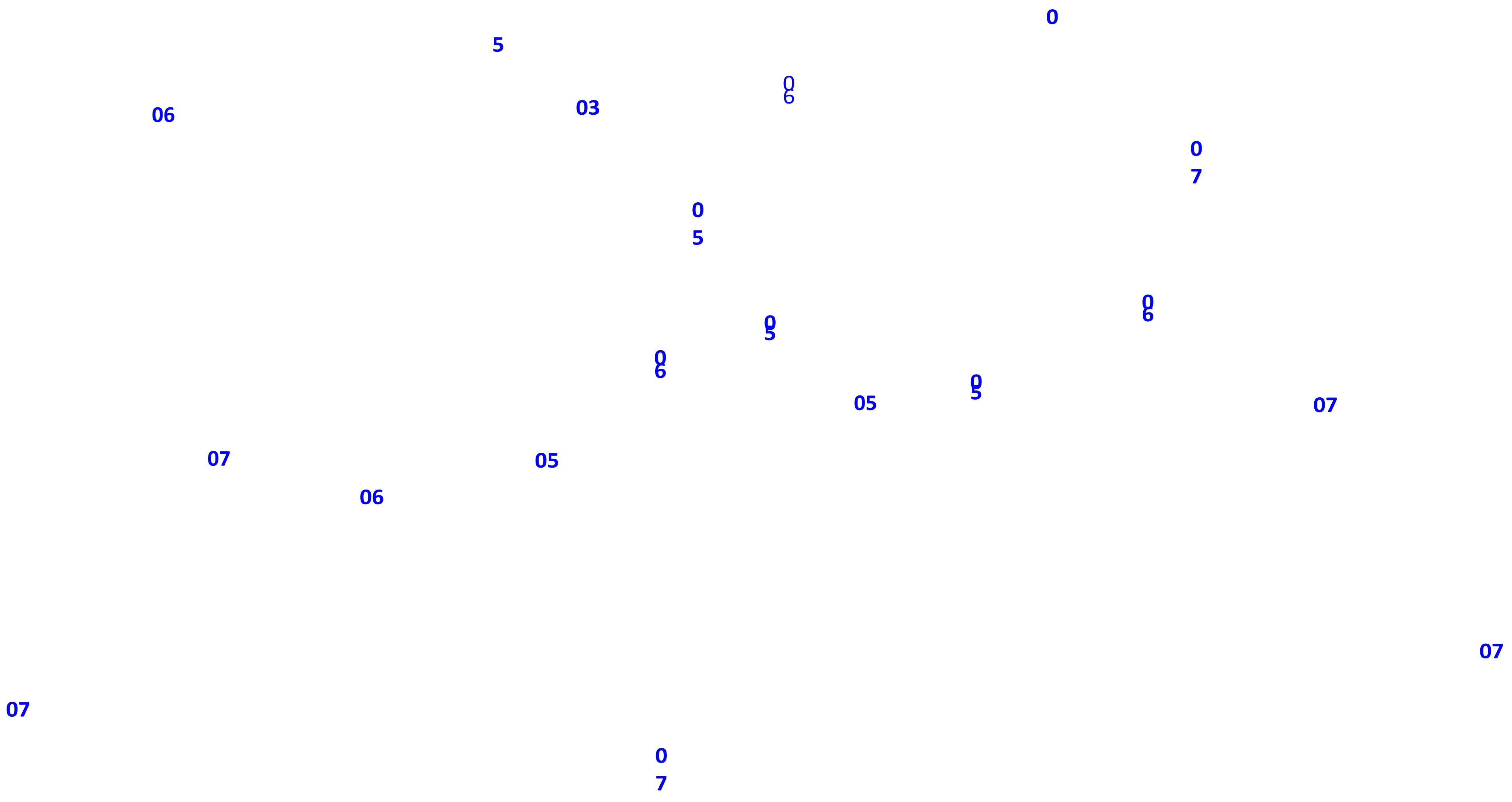
0
5
0
6
06
03
0
7
0
5
0
6
0
5
0
6
0
5
05
07
07
05
06
07
07
0
7